BW Clip

2 OR 3 YEAR H_2S, CO, O_2, SO_2 SINGLE-GAS DETECTOR

BW Technologies by Honeywell

Part Number 50115903-067 | OM-EN-PALO-A8 | BW Clip Operator Manual

BW Clip is a portable, single-gas detector manufactured by BW Technologies by Honeywell (BW). BW Clip continuously measures the concentration of a specific gas in the ambient environment, and activates an alarm when concentrations exceed alarm setpoints. It is your responsibility to respond appropriately to the alarms.

BW Clip is a member of the GasAlert family of products. It is compatible with IntelliDoX and MicroDock II automatic test and calibration stations, as well as Fleet Manager II software version 4.0 or higher. For more information, visit the product website at www.honeywellanalytics.com

Safety Information: Read First

⚠ WARNING

1. Substitution of components may impair Intrinsic Safety.
2. Periodically test the response of the sensor by exposing the detector to a target gas concentration that exceeds the low alarm setpoint. Manually verify that the audible and visual alarms are activated.
3. Detectors in hibernation mode are not functional.

⚠ CAUTION

1. Activate the detector before the activation date on the package.
2. This product is a gas detector, not a measurement device.
3. Ensure that the sensor grill is free of dirt, debris, and is not obstructed.
4. Clean the exterior with a soft, damp cloth.
5. Bump test the detector in a normal atmosphere that is free of hazardous gas.
6. For optimal performance, periodically zero the sensor in a normal atmosphere (20.9% v/v O_2) that is free of hazardous gas.

Informations de sécurité – À lire au préalable

AVERTISSEMENT

1. Le remplacement d'un composant de l'appareil peut compromettre la sécurité intrinsèque du détecteur.
2. Testez périodiquement la réponse du capteur en exposant le détecteur à une concentration de gaz supérieure au seuil d'alarme basse. Vérifiez manuellement que les alarmes sonores et visuelles sont activées.
3. Détecteurs en mode veille prolongée ne sont pas fonctionnels.

MISE EN GARDE

1. Activez le détecteur avant la date d'activation sur l'emballage.
2. Ce produit est un détecteur de gaz, pas un dispositif de mesure.
3. Veillez à assurer que la grille du capteur est exempt de saleté, les débris, et ne soit pas obstrué.
4. Nettoyez l'extérieur de l'appareil à l'aide d'un chiffon doux et humide.
5. Veillez à effectuer un test fonctionnel du capteur dans une atmosphère normale qui est exempte de gaz dangereux
6. Pour des performances optimales, zéro périodiquement le capteur dans une atmosphère normale (20,9% v/v O_2) qui est exempte de gaz dangereux.

BW Technologies by Honeywell — Corporate Headquarters, Calgary, Alberta — 50105442-066/A English/英语

China RoHS 2 Card

Part or Assembly Name	Hazardous Substances					
	Lead (Pb)	Mercury (Hg)	Cadmium (Cd)	Hexavalent Chromium (Cr (VI))	Polybrominated bibhenyls (PBB)	Polybrominated diphenyl ethers (PBDE)
Gas Sensors	X	0	0	0	0	0
Circuit Board Assembly	0	0	0	0	0	0
Enclosure Material	0	0	0	0	0	0

All parts and assemblies not listed in this table contain hazardous substances below the limit requirements of GB/T 26572

This table is prepared in accordance with the provisions of SJ/T 11364

0: Indicates that said hazardous substance contained in all of the homogeneous materials for this part is below the limit requirement of GB/T 26572

X: Indicates that said hazardous substance contained in at least one of the homogenous materials used for this part is above the limit requirement of GB/T 26572

中文

BW Technologies by Honeywell — 公司总部 Calgary, Alberta — 50105442-066/A 中文/Chinese

中国 **RoHS 2** 信息

部件名称	有害物质					
	铅 (Pb)	汞 (Hg)	镉 (Cd)	六价铬 (Cr (VI))	多溴联苯 (PBB)	多溴二苯醚 (PBDE)
传感器	X	0	0	0	0	0
电路板元器件	0	0	0	0	0	0
外壳	0	0	0	0	0	0

本表格中未列出的所有部件和配件包含的有害物质都没有超过GB/T 26572所要求的限制。

本表格依据SJ/T 11364的规定编制

0:表示该有害物质在该部件所有均质材料中的含量均在GB/T26572规定的限量要求以下。

X:表示该有害物质至少在该部件的某一均质材料中的含量超出GB/T26572规定的限量要求。

English

Getting Started

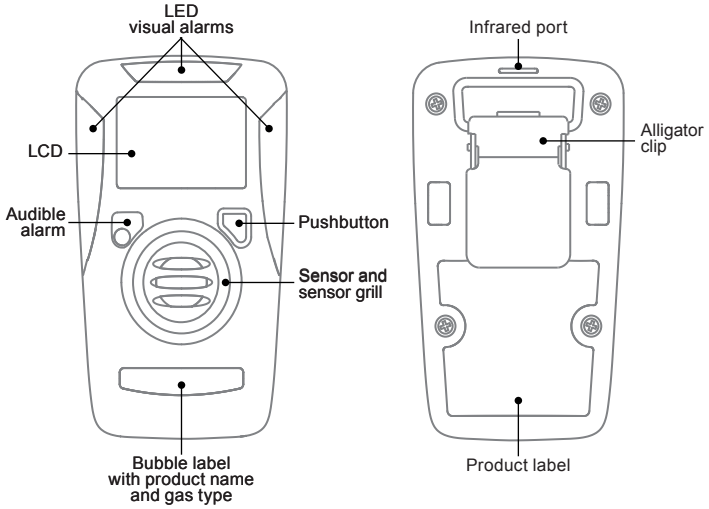

LCD and Symbols

	Pushbutton prompt. When this symbol is displayed, press and hold the pushbutton until the symbol disappears.
% VOL	BW Clip O_2 models only. Oxygen concentration is measured as percent by volume.
ppm	BW Clip H_2S, CO and SO_2 models only. Toxic gas concentration is measured in parts per million.
LOW ALARM / ALARM HIGH	Low alarm and high alarm. These symbols are displayed when a gas concentration that exceeds alarm setpoints is detected.
	Non-compliance warning. This symbol is displayed when a diagnostic or compliance test fails; when the operating life countdown reaches 24 hours or less; and for up to 30 days after operating life expiry. It is also displayed when certain notifications are enabled through Fleet Manager II via an IntelliDoX station.
	Real-time clock. This symbol is displayed when real-time clock is enabled through Fleet Manager II via an IntelliDoX station.
EXPIRY	End of operating life warning. This symbol is displayed when the operating life countdown reaches 24 hours or less.
	Peak reading. This symbol is displayed when a maximum gas exposure event has occurred within the past 24 hours.
X	Bump test reminder. If the detector is configured to display a bump test reminder, this symbol is displayed when a bump test is due. **X** indicates a failed test.
X	BW Clip O_2 models only. This symbol is displayed when more than 24 hours have elapsed since the last successful zero procedure was performed. **X** indicates a failed test.
MM DD	Operating life remaining in months (MM) or days (DD).

BW Clip Factory Calibration Certificate

This instrument was factory inspected, tested and calibrated in accordance with the conditions and requirements of our registered Quality System, Operating Standards and Sales Agreements.

BW Clip

2 OR 3 YEAR H_2S, CO, O_2, SO_2 SINGLE-GAS DETECTOR

Activate a New Detector

1. Move to a normal atmosphere (20.9% v/v O_2) that is free of hazardous gas.
2. Press and hold the pushbutton until a 5 second countdown is displayed, and then continue to hold until the countdown is complete.
3. When the countdown is complete, the LCD and LEDs turn on and then turn off. The detector performs an internal diagnostic test.
4. When the diagnostic test is successful, the alarm setpoints are displayed and the LEDs flash.
5. The sensor stabilization countdown is displayed. During the countdown, the detector vibrates continuously for 20 seconds. The time required to stabilize varies depending on sensor type. When the countdown reaches 0, the LEDs flash and the audible alarm beeps.
6. When the type of gas detected and the operating life countdown are displayed, the detector is in normal operating mode.

Normal Operating Mode

When the detector is in normal operating mode, the type of gas detected is permanently displayed. The remaining operating life is displayed until it is disrupted by a pushbutton action, gas alarm, or error event.

Operating Life

When the detector is activated for the first time, the operating life countdown is displayed. The countdown displays remaining operating life in months until the countdown reaches 90 days or less before expiry.

90 Days or Less Remaining

When the operating life countdown reaches 90 days or less before expiry, the countdown display changes to days. The countdown displays the remaining operating life in days until the countdown reaches 24 hours or less before expiry.

24 Hours or Less Remaining

When the operating life countdown reaches 24 hours or less before expiry, the countdown display changes to hours, and the **EXPIRY!** warning and non-compliance symbol are displayed.

End of Operating Life

When the operating life countdown ends, the detector deactivates and detector safety functions are disabled. It is possible to retrieve event logs for a limited time after expiry. The **EXPIRY!** warning and non-compliance symbol are displayed for up to 30 days after expiry.

Internal Diagnostic Tests

Activated detectors automatically perform one internal diagnostic test every 24 hours. If the internal diagnostic test fails, the diagnostic fail-safe begins.

Diagnostic Fail-Safe

1. The **EXPIRY!** warning and non-compliance symbol are displayed.
2. The detector beeps and vibrates.
3. The LEDs flash 2 times per second for 15 seconds.
4. **OFF** or an error code is displayed. The detector is deactivated.

It is possible to retrieve the event logs for a limited time after expiry. If you are unable to retrieve the event logs, contact BW.

Alarms and Warnings

An alarm is initiated when the sensor is exposed to a gas concentration that exceeds alarm setpoints. The alarm persists until the alarm gas concentration returns to an acceptable range. You can use Fleet Manager II via an IntelliDoX station to enable the display of the gas concentration reading during an alarm. Battery life decreases rapidly when the detector is in alarm condition.

Low Alarm

Audible: 1 beep per second

Visual: 1 flash per second

Vibration: 1 vibration per second

High Alarm

Audible: 2 beeps per second

Visual: 2 flashes per second

Vibration: 2 vibrations per second

Over-Limit and Under-Limit Alarms

If the gas concentration is beyond the sensor range, **OL** (over-limit) or **-OL** (under-limit) is displayed.

Audible: 2 beeps per second

Visual: 2 flashes per second

Vibration: 2 vibrations per second

Automatic Zero Reminder for O_2 Models

For O_2 models only, the **Automatic Zero Reminder** is displayed when more than 24 hours have elapsed since the last successful zero procedure was performed.

Peak Readings

The peak readings symbol is displayed when the sensor is exposed to a gas concentration that exceeds the alarm setpoints. It is no longer displayed when more than 24 hours have passed since the last alarm, or when a successful bump test is performed via an IntelliDoX or MicroDock II station.

Non-compliance Symbol and LED Indicators

⚠ The non-compliance warning symbol is displayed when:

- an internal diagnostic test fails;
- a bump test or zero procedure fails;
- a bump test is due, if enabled;
- the sensor is exposed to a gas concentration that exceeds alarm setpoints, if enabled.

The non-compliance warning symbol is no longer displayed when more than 24 hours have passed since the last alarm, or when a successful bump test is performed via an IntelliDoX or MicroDock II station. The non-compliance warning symbol is permanently displayed when the service-life countdown reaches 24 hours or less before expiry, and for up to 30 days after expiry.

When **Non-compliance after gas exposure** is enabled through Fleet Manager II via an IntelliDoX station, the LEDs flash in an alternating pattern when the non-compliance warning symbol is displayed. When the symbol is first displayed, the top LEDs flash. After 30 seconds, the side LEDs flash. After 30 seconds, the pattern repeats until the non-compliance warning symbol is no longer displayed.

NOTE: When the detector is bump tested via a MicroDock II station, an abnormal test result may occur if non-compliance LEDs are flashing. To suspend the flashing for up to 10 minutes, press and release the pushbutton. When the flashing stops, insert the detector and perform the test. If the bump test fails, the LEDs resume flashing.

Recall Events and Settings

When the detector is in normal operating mode, press the pushbutton at any time to scroll through events and settings that are not empty or disabled through Fleet Manager II via an IntelliDoX station. Events and settings are displayed in this order:

1. **Peak Reading**, if available, and when a maximum gas exposure event has occurred within the past 24 hours.
2. **Time of Peak Reading**, if Real-time Clock display is enabled.
3. **Low Alarm Setpoint**
4. **High Alarm Setpoint**
5. **Real-time Clock**, if enabled.
6. **Firmware Version**
7. **Next Bump Due**, if enabled.
8. **Hibernation**, for 2-year H_2S and CO hibernation models only.

While an event or setting is displayed, press the pushbutton to scroll to the next available event or setting. If you do not press the pushbutton, or if you have reached the last available event or setting, the detector returns to normal operation.

Zero the Sensor

Over time and through use, the sensor baseline at zero exposure may drift from the manufacturer's baseline. For optimal performance of O_2 models, BW recommends that you zero the O_2 sensor once every 24 hours or when the **Automatic Zero Reminder** is displayed. For all other models, BW recommends that you zero the sensor periodically.

Zero Procedure

1. Move to a normal atmosphere (20.9% v/v O_2) that is free of hazardous gas.
2. Press and hold the pushbutton until a 5 second countdown is displayed, and then continue to hold until the countdown is complete.
3. When the countdown is complete, the **Zero** procedure begins and **ZErO** is displayed.
4. When **Zero** is successful, **PASS** is displayed, and then the detector returns to normal operation.
5. If **Zero** is not successful, the non-compliance LED flashes. **FAIL** and the non-compliance warning symbol are displayed. Press the pushbutton to acknowledge the result and return to normal operation. The non-compliance warning symbol is displayed and the non-compliance LED flashes. Perform the **Zero** procedure again. If the procedure fails again, contact BW.

Bump Tests

When the detector is configured to display a bump test reminder, the bump test symbol is displayed when a bump test is due. For best results, bump test the detector via an IntelliDoX or MicroDock II station. Bump tests performed via an IntelliDoX or MicroDock II station are logged as bump tests. Manual bump tests are logged as unsafe gas concentrations.

Event Logs

The detector stores the last 35 events that occurred, including peak readings, bump tests and auto zeros. Each record contains:

- detector serial number, sensor type and life-remaining;
- total number of events that have occurred;
- event type and duration;
- alarm level(s) in ppm or %;
- time elapsed since the alarm occurred in days/hours/minutes;
- duration of the alarm (minutes/seconds).

Use Fleet Manager II via an IntelliDoX or MicroDock II station to transfer event logs from the detector to a computer. When logs are transferred via an IntelliDoX station, the most recent 35 events are transferred. When logs are transferred via a MicroDock II station, the most recent 10 events are transferred.

Optional Settings

Use Fleet Manager II via an IntelliDoX station to enable the following optional settings for BW Clip detectors.

Display Gas Reading During Alarm

When **Display gas reading during alarm** is enabled, the gas concentration is displayed when a gas alarm event is detected. The gas concentration is displayed until the alarm event ends.

Non-compliance After Gas Exposure

When **Non-compliance after gas exposure** is enabled, the LEDs flash in an alternating pattern when the sensor is exposed to a gas concentration that exceeds alarm setpoints. When the gas exposure is detected, the top LEDs flash. After 30 seconds, the side LEDs flash. After 30 seconds, the pattern repeats until more than 24 hours have passed since the last alarm, or when a successful bump test is performed via an IntelliDoX or MicroDock II station.

Real-time Clock Display

When **Real-time Clock Display** is enabled, you can display the current time by pressing the pushbutton to **Recall Events and Settings**, and then continuing to press the pushbutton until the time is displayed.

Time may be displayed in 12-hour or 24-hour clock format.

Hibernation

Hibernation is a factory installed feature that is available for 24-month H_2S and CO detectors. When **Hibernation** is activated, the operating life countdown is suspended. Use **Hibernation** to deactivate the detector for 7 days or longer, up to a maximum of 12 months. When **Hibernation** is activated, all detector safety functions are disabled.

Activate Hibernation via BW Clip Hibernation Case

1. Have ready a BW Clip Hibernation Case. To purchase a Case, contact BW or an authorized distributor.
2. Move to a normal atmosphere (20.9% v/v O_2) that is free of hazardous gas.
3. Verify that the detector is in normal operating mode.
4. Press the pushbutton to **Recall Events and Settings**, and then continue to press the pushbutton until **Hib** is displayed.
5. While **Hib** is displayed, press the pushbutton until a 5 second countdown is displayed. When the countdown is complete, the 20-second **Hibernation** counter is displayed.
6. While the **Hibernation** counter is displayed, place the detector into a BW Clip Hibernation Case and then close the case firmly. The detector enters **Hibernation** mode. All detector safety functions are disabled.
7. To reactivate the detector, open the case.

Activate Hibernation through Fleet Manager II via IntelliDoX

1. Use Fleet Manager II to activate **Hibernation on Insertion** via an IntelliDoX station, and then insert the detector in the configured station. The detector event logs are retrieved, and the detector enters **Hibernation** mode. All safety functions are disabled, and the detector may be removed from the IntelliDoX station.
2. To reactivate the detector, press and hold the pushbutton until a 5 second countdown is displayed, and then continue to hold until the LCD and LEDs turn on and off. The detector performs a self-diagnostic test. When the test is successful, the type of gas detected and the remaining operating life are displayed. The detector is in normal operating mode.
3. For more information, refer to the operator manuals for the IntelliDoX station and Fleet Manager II software version 4.0 or higher.

BW Clip

2 OR 3 YEAR H_2S, CO, O_2, SO_2 SINGLE-GAS DETECTOR

BW Technologies by Honeywell

About this Publication

This publication is an operator guide for BW Clip portable single-gas detectors manufactured by BW Technologies by Honeywell. It is intended for use with the following models:

- 24- and 36-month H_2S and CO Detectors
- 24-month O_2 detector
- 24-month SO_2 detector

Copyright, Notice, Trademarks

While this information is presented in good faith and believed to be accurate, BW Technologies by Honeywell (BW) disclaims the implied warranties of merchantability and fitness for a particular purpose and makes no express warranties except as may be stated in its written agreement with and for its customers.

In no event is BW liable to anyone for any indirect, special or consequential damages. The content in this document is subject to change.

Contact Us

Corporate Headquarters
BW Technologies by Honeywell
Suite 110 4411-6 Street SE
Calgary, Alberta
Canada, T2G 4E8
Toll-free: 1-800-663-4164

Americas
BW Technologies by Honeywell
405 Barclay Blvd.
Lincolnshire IL USA 60069
Toll-free:1-888-749-8878

Europe
BW Technologies by Honeywell
Hatch Pond House
4 Stinsford Road
Nuffield Industrial Estate
Poole Dorset BH17 0RZ United Kingdom
Toll-free: +44(0)1295 700300

Other
BW Technologies by Honeywell
Toll-free: 1-403-248-9226
info@gasmonitors.com
www.honeywellanalytics.com

Warranty Registration

www.honeywellanalytics.com/support/product-registration

Maximum Operating Life

24-month Detector

2 years after activation, assuming 2 minutes of alarm time per day.

Note: 24-month H_2S and CO detectors that use hibernation may extend the service period of the detector up to an additional year. The service life will end once the detector reaches 24 months of actual operation. Hibernation provides a maximum service life of 36 months.

36-month Detector

3 years after activation, assuming 1 minute of alarm time per day.

Detection Range

H_2S	0 to 100 ppm
CO	0 to 300 ppm
O_2	0 to 25% by volume
SO_2	0 to 100 ppm

Factory Alarm Setpoints

	Low Alarm	High Alarm
H_2S	10 ppm	15 ppm
CO	35 ppm	200 ppm
O_2	19.5% vol	23.5% vol
SO_2	5 ppm	10 ppm

Use Fleet Manager II via an IntelliDoX station to adjust alarm setpoints. For more information, refer to the operator manuals for Fleet Manager II software version 4.0 and the IntelliDoX automatic test and calibration station.

Ratings and Certifications

The BW Clip is in conformity with the following standards:

UL 913 8th Edition
UL 60079-0:2013,
UL 60079-11:2013

CSA C22.2 No. 157-92:2012,
CSA C22.2 No. 60079-0:2011,
CSA C22.2 No. 60079-11:2014

EN 60079-0:2012 +A11:2013,
EN 60079-11:2012

IEC 60079-0:2011
IEC 60079-11:2011

ABNT NBR IEC 60079-0:2008
ABNT NBR IEC 60079-11:2009

UL
Classified by UL to both US and Canadian Standards as intrinsically safe for Class I, Division 1, Group A, B, C, D and Class I, Zone 0, Group IIC.

ATEX
CE 0539 II 1G
Ex ia IIC T4 Ga IP66/67
DEMKO 14 ATEX 1356

CE
European Conformity

EU Declaration of Conformity
www.honeywellanalytics.com

IECEx
Ex ia IIC T4 Ga IP66/67
IECEx UL 14.0063

INMETRO
Ex ia IIC T4 Ga
DNV 15.0024

KTL
15-KA4BO-0306[1]

Specifications

Shelf Life

H_2S	One (1) year before activation
CO	One (1) year before activation
O_2	Six (6) months before activation
SO_2	One (1) year before activation

Instrument Weight alligator clip included
92 grams (3.2 ounces)

Instrument Dimensions alligator clip included
41 x 50 x 87 millimeters
(1.6 x 2.0 x 3.4 inches)

Operating Temperatures

H_2S	-40° to +50°C (-40° to +122°F)
CO	-30° to +50°C (-22° to +122°F)
O_2	-20° to +50°C (-4° to +122°F)
SO_2	-30° to +50°C (-22° to +122°F)

Internal Vibrating
Operates to -10°C (+14°F)

Intrinsic Safety Temperature Range
-40 °C to +50 °C (-40 °F to +122 °F)

Internal Vibrating
5% to 95% relative humidity (non-condensing)

Audible Alarm
≈ 95 dB at 10 cm (3.9 in)

Visual Alarm
Flashing, wide-angled alarm lens with red LEDs plus alarm LCD readout

Display
Liquid crystal display (LCD)

Sensor Type
Electrochemical cells

Battery
Lithium, non-replaceable

Ingress Protection
IP 66/67

Alarm Setpoints
Instant low and instant high

Calibration

H_2S	not required
CO	not required
SO_2	not required
O_2	Perform the **Zero** procedure once every 24 hours or when the **Automatic Zero Reminder** is displayed.

Intended Use
This product is classified for use in hazardous atmospheres that are not more than 21% v/v O_2

Recycling

This instrument contains a lithium battery. Do not mix with the solid waste stream. Spent batteries should be disposed of by a qualified recycler or hazardous materials handler.

⚠ CAUTION

Products may contain materials that are regulated for transportation under domestic and international dangerous goods regulations. Return product in compliance with appropriate dangerous goods regulations. Contact freight carrier for further instructions.

Limited Warranty and Limitation of Liability

BW Technologies (BW) warrants this product to be free from defects in material and workmanship under normal use and service for a period of two or three years (depending upon detector), beginning on the date of activation. 24-month H_2S and CO detectors are covered for up to an additional 12 months when hibernation is used, limited by a total of 24 months of detector operation. This Warranty is valid only if the detector is activated by the date on the package. This warranty extends only to the sale of new and unused products to the original buyer.

BW's warranty obligation is limited, at BW's option, to refund of the purchase price, repair, or replacement of a defective product that is returned to a BW authorized service center within the warranty period. In no event shall BW's liability hereunder exceed the purchase price actually paid by the buyer for the Product.

This warranty does not include:

- fuses, disposable batteries or the routine replacement of parts due to the normal wear and tear of the product arising from use;
- any product which in BW's opinion, has been misused, altered, neglected or damaged by accident or abnormal conditions of operation, handling or use; or
- any damage or defects attributable to repair of the product by any person other than an authorized dealer, or the installation of unapproved parts on the product.

The obligations set forth in this warranty are conditional on:

1) proper storage, installation, calibration, use, maintenance and compliance with the product manual instructions and any other applicable recommendations of BW;
2) the buyer promptly notifying BW of any defect and, if required, promptly making the product available for correction. No goods shall be returned to BW until receipt by the buyer of shipping instructions from BW; and
3) the right of BW to require that the buyer provide proof of purchase such as the original invoice, bill of sale or packing slip to establish that the product is within the warranty period.

THE BUYER AGREES THAT THIS WARRANTY IS THE BUYER'S SOLE AND EXCLUSIVE REMEDY AND IS IN LIEU OF ALL OTHER WARRANTIES, EXPRESS OR IMPLIED, INCLUDING BUT NOT LIMITED TO ANY IMPLIED WARRANTY OF MERCHANTABILITY OR FITNESS FOR A PARTICULAR PURPOSE. BW SHALL NOT BE LIABLE FOR ANY SPECIAL, INDIRECT, INCIDENTAL OR CONSEQUENTIAL DAMAGES OR LOSSES, INCLUDING LOSS OF DATA, WHETHER ARISING FROM BREACH OF WARRANTY OR BASED ON CONTRACT, TORT OR RELIANCE OR ANY OTHER THEORY.

Since some countries or states do not allow limitation of the term of an implied warranty, or exclusion or limitation of incidental or consequential damages, the limitations and exclusions of this warranty may not apply to every buyer. If any provision of this warranty is held invalid or unenforceable by a court of competent jurisdiction, such holding will not affect the validity or enforceability of any other provisions.

1 http://www.honeywellanalytics.com/~/media/honeywell-analytics/products/bw-clip/docu-ments/certi icates/korea-certi ication_bw-clip-15ka-4bo0306