IntelliDoX

Operator Manual

BW Technologies
by Honeywell

Table of Contents

Table of Contents **1**
About this Publication **3**
Important Safety Information: Read First **4**
Getting Started **5**
About the IntelliDoX Docking Module 6
What's in the Box 7
IntelliDoX at a Glance 8
Inlet Keys 9
LCD Screen 11
Keypad 12
Assemble Modules **13**
Work Plan: Assemble Individual Modules 14
Work Plan: Assemble Gangs of up to Five Connected Modules 15
Assemble the Stand 16
Connect Modules 17
Mount on a Wall 18
Mount on Parallel DIN Rails 22
Prepare Modules for Use **25**
Attach the End Plate 26
Connect the Exhaust Tubing 27
Connect the Inlet filter 28
Insert the Inlet Plugs 29
Connect the Power 30
Connect the Module to a Network 31
Connect a Calibration Gas Cylinder 35
Dock Station Settings Menu **37**
Display the Dock Station Settings Menu 38
Adjust the LCD Brightness 39
Adjust Date and Time Settings 40
Configure Gas Inlets 41
Display the Select Language Menu 43
Display the About Summary Screen 44
Detector Operations **45**
Insert a Detector 46
Detector Operations Menu 47
Bump Test 48
FastBump 49
Calibration 51
Transfer Datalogs from a Detector 53
Display the Adjust Dock Station Settings Menu 54
Charge a Detector 55
Configure Settings via Fleet Manager II Software **56**
Protect Module Operations with a Passcode 57
Configure Module and Detector Settings 58
Adjust Time and Date Settings via Fleet Manager II Software 61
Hibernation **64**
Configure Hibernation 65

Transfer Data Files **69**
Transfer Data Files from the Module 70
Update Firmware **72**
Update Module Firmware 73
Update Detector Firmware 75
Replace Detector Cradle and Calibration Insert **77**
Replace the Detector Cradle 78
Replace the Calibration Insert 80
Maintenance **82**
Clean and Maintain the Module 83
Calibration Equipment and Gases 84
Technical Specification and Warranty **85**
Technical Specification 86
Limited Warranty and Limitation Liability 87
Glossary **88**
Contact BW Technologies **91**

About this Publication

IntelliDoX Docking ModuleOperator Manual
50104991-168 || OM-EN-FMSU-C1
© 2015 BW Technologies by Honeywell. All rights reserved.

The IntelliDoX Docking Module is designed to support multiple detectors manufactured by BW Technologies. As a result, certain procedures, features and options described in this manual may not be supported by all of the compatible detector models. To understand which procedures, features and options are supported, refer to the appropriate detector operator manual.

Ensure that you are familiar with the use of personal gas detection devices and accessories, and take appropriate action in the event of an alarm condition.

While this information is presented in good faith and believed to be accurate, BW Technologies disclaims the implied warranties of merchantability and fitness for a particular purpose and makes no express warranties except as may be stated in its written agreement with and for its customers. In no event is BW Technologies liable to anyone for any indirect, special or consequential damages. The information and specifications in this document are subject to change without notice.

Trademarks

Brand or product names are trademarks of their respective owners. The following brand or product names are trademarks of BW Technologies and/or Honeywell:

- Fleet Manager II
- IntelliDoX

Signal Words

This manual uses the following signal words, as defined by ANSI Z535.4-1998:

⚠DANGER

Hazardous situation which, if not avoided, will result in death or serious injury. This symbol identifies the most extreme hazardous situations.

⚠WARNING

Hazardous situation which, if not avoided, could result in death or serious injury.

⚠CAUTION

Hazardous situation which, if not avoided, may result in moderate or minor injury.

NOTICE

Situations which, if not avoided, may result in property damage.

Important Safety Information: Read First

To ensure personal safety, read all Safety Information and Warnings before using this equipment.

Use this equipment only as specified by the manufacturer. Failure to do so may impair protection provided by the equipment.

The safety and security of any system or network incorporating this equipment and its accessory components is the responsibility of the assembler of the system.

Follow all required National Electric Codes (NEC) and safety standards.

This IntelliDoX module is intended for use as a stand-alone docking module, or as a component in a connected gang of up to five IntelliDoX modules.

⚠WARNING

If the equipment is damaged or parts are missing, contact BW Technologies immediately.

Substitution of components may impair the safety of the equipment.

Do not attempt to disassemble, adjust, or service the equipment unless instructions are provided to perform a procedure, or a component is listed as a user-replaceable component in the user manual. Use only BW Technologies replacement components.

To eliminate the risk of electrical shock, disconnect the equipment when cleaning or performing maintenance.

This equipment uses potentially harmful gas for calibrations. The equipment must be attached to a venting system or be used in a well-ventilated area.

To prevent gas leaks, the end plate must be attached and locked with the latch arm lock before connecting power supply and/or connecting gas cylinders. The end plate must remain securely latched at all times during operation.

Perform calibrations and bump tests only in a normal atmosphere (20.9% v/v O_2) that is free of hazardous gas.

The maximum recommended calibration tubing length is 10 meters (33 feet). Use of tubing that is longer than the recommended length may result in inaccurate or failed compliance tests or calibrations.

The maximum recommended exhaust tubing length is 15 meters (49.5 feet).

Ensure that the inlet filter is clean.

The use of calibration gas cylinders other than those specified by BW Technologies may result in unsafe calibration or possible non-recoverable failure of the equipment, and will invalidate the warranty.

Do not use calibration gas cylinders past their expiration date.

Ensure that all calibration gas cylinders are in good condition.

Ensure that all calibration gas cylinders contain enough gas.

Ensure the exhaust line is not connected to a negative pressure system.

A demand flow regulator must be used with all calibration gas cylinder connections. The module inlet should not be pressurized.

Failed tests can result if inlets are not set up correctly.

Do not expose the equipment to electrical shock or severe and/or continuous mechanical shock.

Do not immerse the equipment in liquids.

⚠CAUTION

Products may contain materials that are regulated for transportation under domestic and international dangerous goods regulations. Return product in compliance with appropriate dangerous goods regulations. Contact freight carrier for further instructions.

NOTICE

To prevent the corruption or loss of data and/or software and/or firmware, do not deactivate the equipment while performing datalog transfers, bump tests, calibrations or other operations.

Getting Started

This section contains information and illustrations related to the module and its components. It also includes an overview of the module settings menu and general instructions for inserting a detector and using the detector operations menu on the module.

Contents

About the IntelliDoX Docking Module 6
Normal Operating Conditions 6
Parts and Accessories 6
Warranty Registration 6
What's in the Box 7
IntelliDoX Docking Module 7
IntelliDoX Enabler Kit 7
Fleet Manager II Software 7
IntelliDoX at a Glance 8
Inlet Keys 9
Single-inlet Key 10
Multi-inlet Key 10
LCD Screen 11
Screen Color 11
Keypad 12
Keypad Buttons 12

About the IntelliDoX Docking Module

The IntelliDoX Docking Module ('the module') is an automatic test and calibration station for use with portable gas detectors manufactured by BW Technologies. The module automatically performs essential procedures including sensor identification, bump tests, calibrations, alarm tests and data transfers. It also retains a cumulative record of detector datalogs and event logs that are transferred to and stored in onboard memory.

Modules may be used as individual, stand-alone docking stations. They may also be connected to form gangs of up to 5 modules that function independently. Connected modules share power, network and gas connections.

Modules may be connected to a network via an Ethernet cable for enhanced access to and control of administrative and maintenance tasks. Modules are compatible with Fleet Manager II software, version 4.0 or higher.

Normal Operating Conditions

The module is designed to be safe in the following conditions:

1. Indoor use only;
2. Normal atmosphere (20.9% v/v O_2) that is free of hazardous gas;
3. Temperature range of +50°F to +95°F (+10°C to +35°C) ; and
4. Relative humidity of 10% to 90% non-condensing.

If the intended operating environment does not match these criteria, BW Technologies recommends that you consult a qualified professional specialist prior to installing and using any modules.

This equipment uses potentially harmful gas for calibrations. The module must be attached to a venting system or be used in a well-ventilated area.

Parts and Accessories

Replaceable parts are sold separately. To receive a complete list of replaceable parts approved for use with this product, contact BW Technologies or an authorized distributor, or visit the product website at www.honeywellanalytics.com

Gas detectors, calibration and purge gas cylinders, and other accessories are sold separately. To receive a complete list of calibration gases and accessories approved for use with this product, contact BW Technologies or an authorized distributor, or visit the product website at www.honeywellanalytics.com.

Warranty Registration

www.honeywellanalytics.com/support/product-registration

What's in the Box

IntelliDoX Docking Module

Each IntelliDoX Docking Module package contains:

1. One module with a factory-installed nest for a compatible portable gas detector, a single-inlet key, and an attached end plate;

> NOTE: If the end plate is not attached to the IntelliDoX docking module or is missing, contact BW Technologies or an authorized distributor immediately.

2. One printed Quick Reference Guide;
3. One CD containing the module Operator Manual and Quick Reference Guide in PDF format; and
4. One CD containing Fleet Manager II software, v4.0 or higher.

The power supply and power cord, Ethernet cable, tubing, inlet filters and plugs, quick connect fittings, and miscellaneous other fittings are packaged separately as the IntelliDoX Enabler Kit. One Enabler Kit is required for each individual module or gang of up to 5 connected modules.

If the module is damaged or if parts are missing, contact BW Technologies or an authorized distributor immediately.

IntelliDoX Enabler Kit

You need one IntelliDoX Enabler Kit for each stand-alone IntelliDoX module or gang of up to 5 connected modules. Each Enabler Kit contains:

1. One power supply and AC power cord appropriate to shipping destination;
2. One ethernet cable;
3. Gas tubing, 1/8 inch I.D., 4.6 meters (15 feet);
4. Quick connect fittings;
5. Inlet filters and plugs;
6. Connectors with attached 3/16 inch I.D. tubing for use with demand flow regulators;
7. Miscellaneous connectors;
8. One CD containing the IntelliDoX operator manual and the quick reference guide in PDF format; and
9. One CD containing Fleet Manager II software, v4.0 or higher.

If Enabler Kit parts are damaged or missing, or if additional Enabler Kits are required, contact BW Technologies or an authorized distributor immediately.

Fleet Manager II Software

Fleet Manager II is proprietary instrument management software developed by BW Technologies. You can use Fleet Manager II to:

- Configure and manage compatible docking modules and detectors;
- Update firmware for compatible docking modules and detectors;
- Configure and manage compliance tests;
- Import, manage and analyze datalogs, event logs and compliance test results; and
- Automate certain procedures and processes for compatible docking modules and detectors.

To learn more about instrument management via Fleet Manager II software, refer to the Fleet Manager II Operator Manual or visit the product website at www.honeywellanalytics.com.

IntelliDoX at a Glance

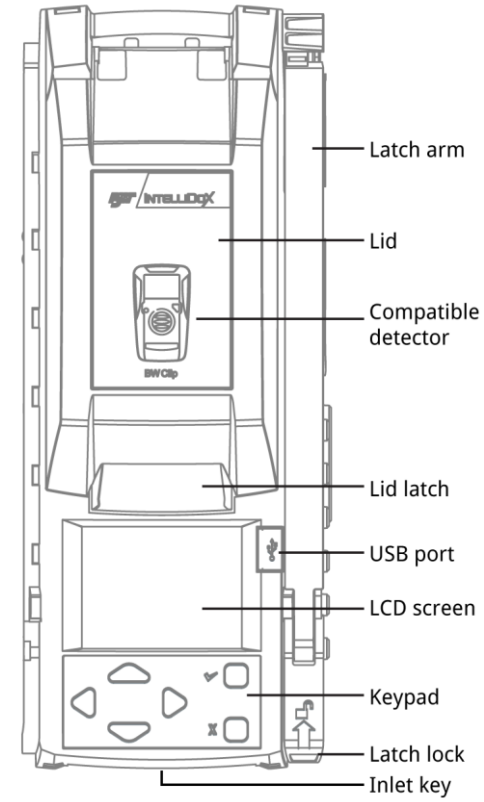

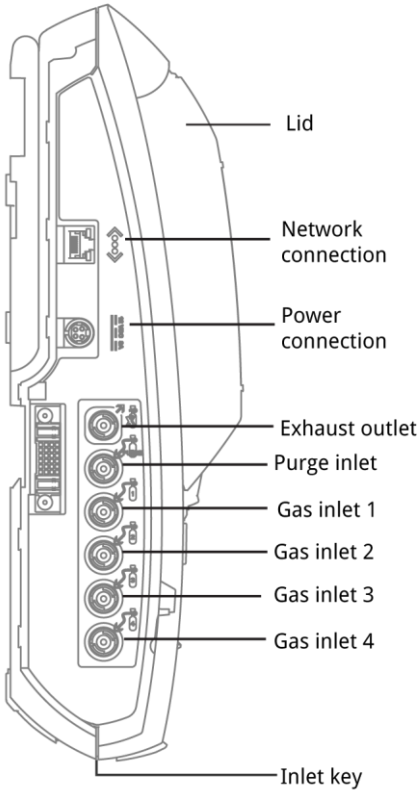

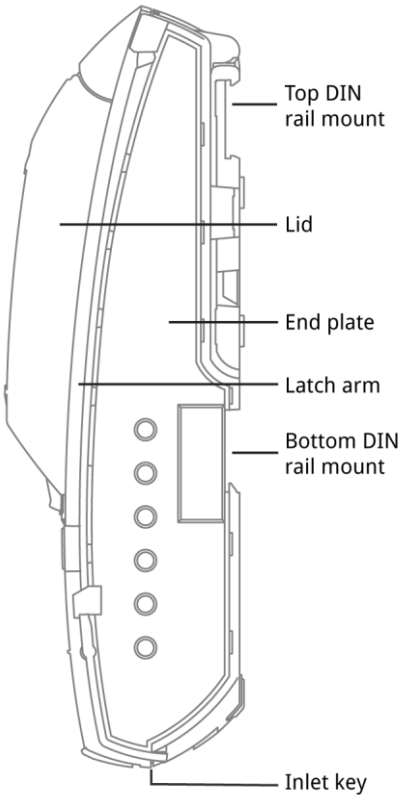

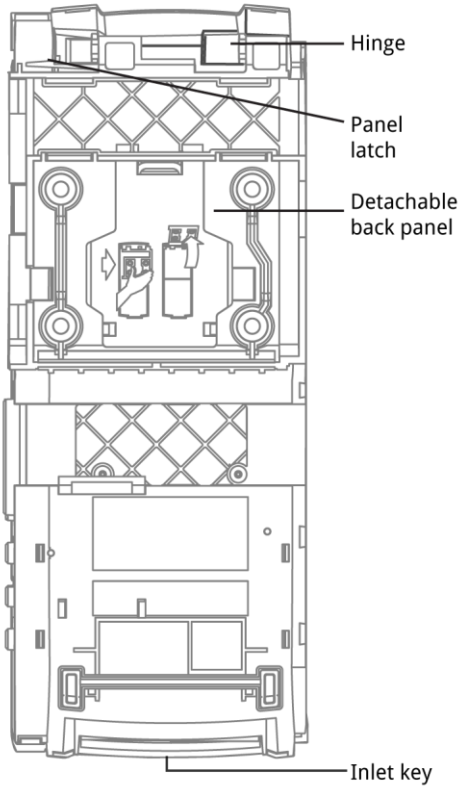

Inlet Keys

By default, IntelliDoX is configured to connect one calibration gas cylinder to gas inlet 1. In this configuration, gas inlets 2, 3, and 4 are inactive. To connect more than one calibration gas cylinder to IntelliDoX, you must insert a multi-inlet key to activate gas inlets 1, 2, 3, and 4.

Single-inlet Key

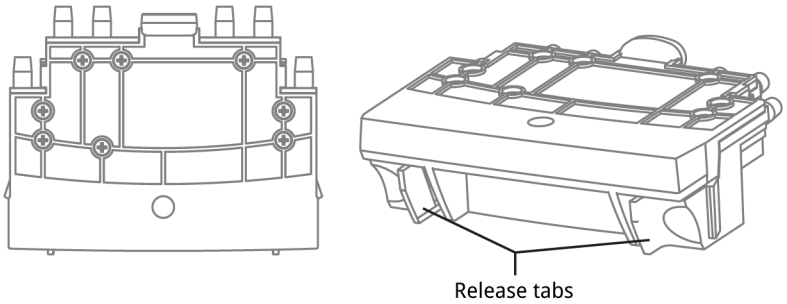

Insert the single-inlet key when only one gas inlet is required to support compliance test operations performed on the module.

When the single-inlet key is inserted into a module, gas inlet 1 is active and gas inlets 2, 3 and 4 are inactive.

Gas Cylinder with a Single-Inlet Key

When you connect a gas cylinder to IntelliDoX with a single-inlet key, you will see one connected gas type on the LCD screen:

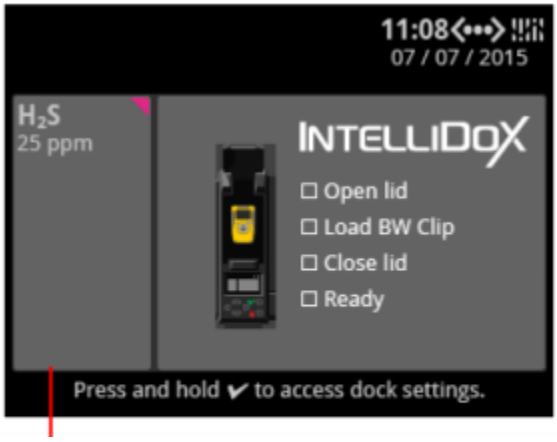

Single-inlet key: IntelliDoX activates gas inlet 1 and displays one connected gas cylinder .

Multi-inlet Key

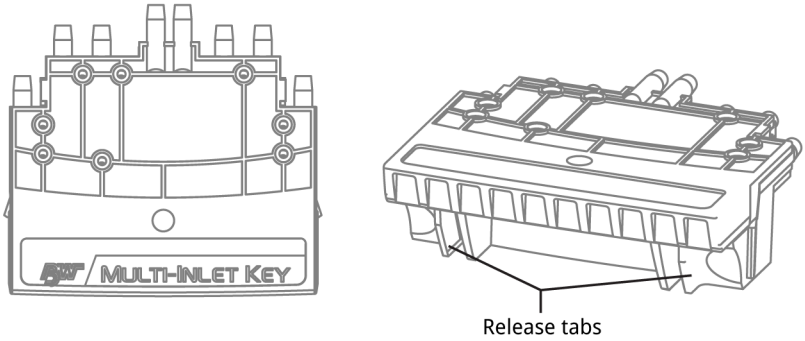

Insert the multi-inlet key when more than one gas inlet is required to support compliance test operations performed on the module.

When a multi-inlet key is inserted into a module, gas inlets 1, 2 3 and 4 are active.

Connected Gas Cylinders with a Multi-Inlet Key

When you connect multiple gas cylinders to IntelliDoX with a multi-inlet key, you will see multiple connected gas types on the LCD screen:

Multi-inlet key: IntelliDoX activates gas inlets 1, 2, 3, and 4 and displays up to four connected gas cylinders.

Multi-inlet key: IntelliDoX activates gas inlets 1, 2, 3, and 4 and here displays two connected gas cylinders.

Change an Inlet Key

To remove the inlet key, pinch the release tabs together, and then pull the inlet key out.

To insert the inlet key, align the inlet key with the opening and push firmly.

NOTICE Always disconnect the power cord from the IntelliDoX before you change an inlet key.

1. Disconnect the power cord from the IntelliDoX.
2. On the inserted inlet key, press the release tabs and pull to remove the inlet key.
3. Insert the new inlet key into the IntelliDoX.
4. Connect the power cord to the IntelliDoX.

LCD Screen

Screen Color

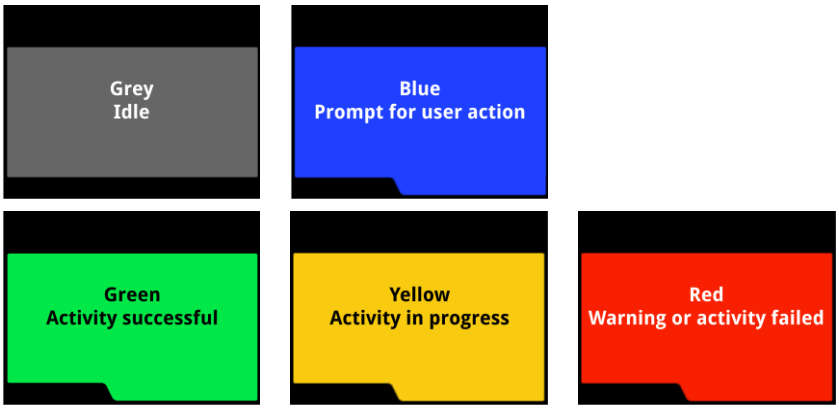

Keypad

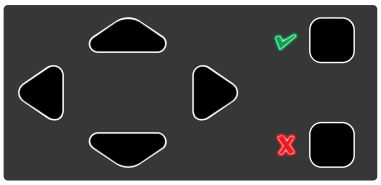

Keypad Buttons

▷	Scroll right
◁	Scroll left
△	Scroll up
▽	Scroll down
✔	Press and hold until the module settings menu is displayed. Press and release to select a menu item or save changes.
X	Press and hold until an operation is cancelled. Press and release to close a menu item or return to a previous screen or cancel changes.

Assemble Modules

This section contains work plans and instructions for assembling and installing individual modules and gangs of up to five modules.

Contents

Work Plan: Assemble Individual Modules **14**
Work Plan: Assemble Gangs of up to Five Connected Modules **15**
Assemble the Stand **16**
Assembling the Stand 16
Connect Modules **17**
Connecting Modules 17
Disconnecting Modules 17
Mount on a Wall **18**
Before you Begin 18
Mounting Individual Modules on a Wall 19
Removing an Individual Module from a Mounted Back Panel 19
Mounting Connected Modules on a Wall 20
Removing Connected Modules from Mounted Back Panels 21
Mount on Parallel DIN Rails **22**
What is a DIN Rail? 22
Before You Begin 22
Mounting Modules on Parallel DIN Rails 23
Removing an Individual Module from Parallel DIN Rails 24
Removing Connected Modules from Parallel DIN Rails 24

Work Plan: Assemble Individual Modules

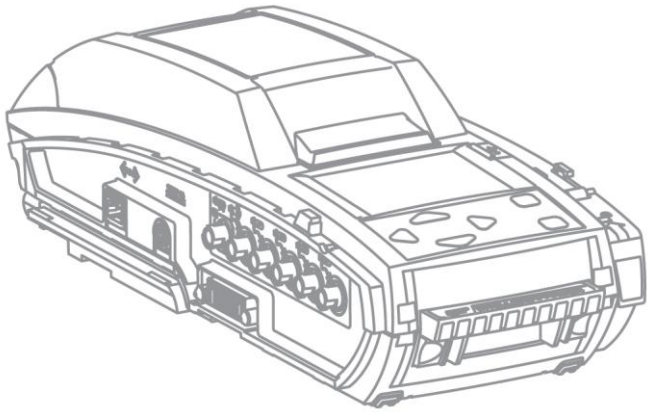

Follow these steps to assemble and prepare an individual module for first-time use:

1. Place the module and component parts on a clean, dry work surface.
2. Verify that the appropriate inlet key is inserted. Replace the inlet key if necessary. For more information, see **Inlet Keys** on page 9.
3. Assemble the stand, or mount the module on a wall or DIN rail. For more information see:
    1. **Assemble the Stand** on page 16
    2. **Mount on a Wall** on page 18.
    3. **Mount on Parallel DIN Rails** on page 22.
4. Prepare the module for use. For more information, see **Prepare Modules for Use** on page 25.
    1. Attach the end plate. For more information, see **Attach the End Plate** on page 26.
    2. Connect an inlet filter to the purge inlet. For more information, see **Connect the Inlet filter** on page 28.
    3. Insert an inlet plug into each unused inlet. For more information, see **Insert the Inlet Plugs o**n page 29.
    4. Connect the exhaust tubing. For more information, see **Connect the Exhaust Tubing** on page 27**.**
    5. Connect the power. For more information, see **Connect the Power** on page 30.
    6. Connect to a network. See **Connect the Module to a Network** on page 31.
5. Connect the calibration gas cylinder or cylinders, and then configure the gas inlets. For more information, see **Configure Gas Inlets** on page 41.

Work Plan: Assemble Gangs of up to Five Connected Modules

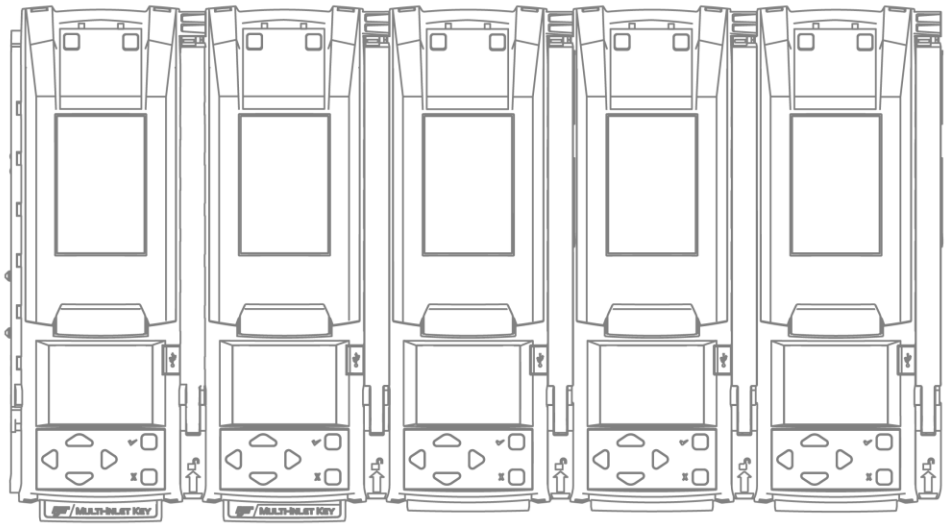

Up to five modules may be connected to form a gang. Connected modules share the power supply, exhaust tubing, inlet filter, connected test gas cylinders and network connection. Follow these steps to assemble and prepare gangs of up to five connected modules for first use:

1. Place the modules and component parts on a clean, dry work surface.
2. Verify that the appropriate inlet keys are inserted. Replace the inlet keys if necessary. For more information, see **Inlet Keys** on page 9.
3. Assemble the stand or mount the module on a wall or DIN rail if necessary. For more information, see:
    - **Assemble the Stand** on page 16.
    - **Mount on a Wall** on page 18.
    - **Mount on Parallel DIN Rails** on page 22.
4. Connect up to 5 modules. For more information, see:
    - **Connecting Modules** on page 17.
    - **Mounting Connected Modules on a Wall** on page 20.
5. Prepare the connected modules for use. For more information, see **Prepare Modules for Use** on page 25.
    1. Attach the end plate to the last module in the gang. See **Attach the End Plate** on page 26.
    2. Connect an inlet filter to the purge inlet on the first module in the gang. For more information, see **Connect the Inlet filter** on page 28.
    3. Insert an inlet plug into each unused inlet on the first module in the gang. For more information, see **Insert the Inlet Plugs o**n page 29.
    4. Connect the exhaust tubing to the first module in the gang. For more information, see **Connect the Exhaust Tubing** on page 27**.**
    5. Connect the power to the first module in the gang.
    6. Connect to a network. See **Connect the Module to a Network** on page 31.
6. Connect the calibration gas cylinder or cylinders, and then configure the gas inlets. For more information, see **Connect a Calibration Gas Cylinder** on page 35 and **Configure Gas Inlets** on page 41.

Assemble the Stand

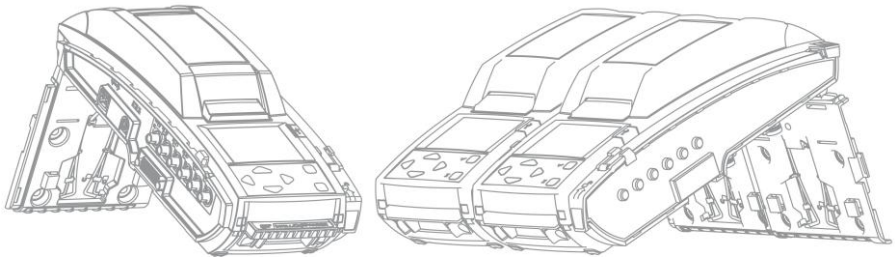

The back panel of the module can be used as a stand to support an individual module or gang of up to five connected modules at an angle that is suitable for normal use.

⚠WARNING

Do not use the stand if parts are missing or damaged. Do not attempt to repair or replace any parts of the stand. If the plate is damaged or missing, contact BW Technologies or an authorized distributor.

The equipment must be used only in a normal atmosphere (20.9% v/v O_2) that is free of hazardous gas. Do not use the equipment in a hazardous area. Failure to adhere to this caution can lead to fire and/or explosion.

Do not install near heat sources or on vibrating surfaces.

The equipment is intended for indoor use only.

Assembling the Stand

1. Disconnect the power cord, network cable, tubing and inlet filter assemblies.
2. Detach the back panel.
    1. Hold the module with the back panel facing toward you.
    2. Find the panel latch at the top left side of the module, near the panel hinge.
    3. Press down firmly on the panel latch, and then continue to press down while you slide the panel to the right until the hinge pins are detached.
3. Pinch the arms of the metal brace together to release the ends. If the metal brace is damaged or missing, contact BW Technologies or an authorized distributor.
4. Attach the back panel at the hinged joint. Align the hinges on the module with the hinge pins on the back panel. Firmly push the back panel to the left to lock the hinge pins into place.
5. Pinch the arms of the metal brace together and insert into the brace receptacle on the back of the module.
6. Prepare the module for use.
    1. Attach the end plate. Verify that the latch arm is lowered and locked.
    2. Connect the inlet filters, tubing, network connection and power cord.

Connect Modules

Up to 5 modules may be connected to form a gang. Connected modules share a power supply, network connection, exhaust tubing, inlet filter assemblies, and connected calibration gas cylinders.

Connecting Modules

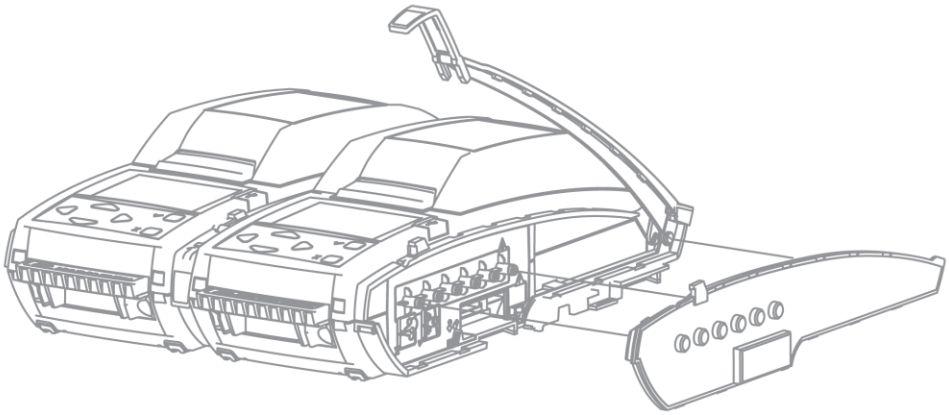

1. Assemble the stand for each module you plan to connect. For more information, see **Assemble the Stand** on page 16.
2. Connect two modules.
    1. Unlock and raise the latch arm on the first module. If an end plate is attached, remove it.
    2. Align the connection port, outlets and stand on the first module with the connection port, inlets and stand on the second module.
    3. Push the modules firmly together to connect. Verify that the stands are connected, and then lower and lock the latch arm on the first module.
3. Unlock and raise the latch arm on the last connected module, and then connect another module. Repeat as necessary to connect up to a maximum of five modules in one gang.
4. Prepare connected modules for use.
    1. Verify that connected modules are firmly attached and latch arms are lowered and locked.
    2. Attach the end plate to the last module in the gang. Verify that the latch arm is lowered and locked.
    3. Connect the inlet filters, tubing, network connection and power cord.
    4. Verify that each module in the gang is activated and a consecutive bay number is displayed on the LCD. See **LCD Screen** on page 11.

Disconnecting Modules

1. Disconnect the power.
2. Unlock and raise the latch arm between two modules.
3. Holding one unit in each hand, gently pull the modules apart.
4. Repeat as necessary until all modules in the gang are disconnected.

Mount on a Wall

You can use the back panel to mount the module securely to a wall. Because wall materials vary, mounting hardware is not provided. BW Technologies strongly recommends that wall-mounting is performed by a qualified installation contractor. Sufficient expertise is required to:

1. Determine the strength of the wall supporting the module; and
2. Select mounting hardware appropriate to the weight and normal use of the module.

Before you Begin

1. Select a suitable installation location. Each module or gang of connected modules requires:
    - Access to an appropriate power source.
    - Access to a network connection, if using.
    - Access to calibration gas sources.
    - Adequate clearance for the power cord, cables and tubing.
    - Adequate clearance for normal use, maintenance and cleaning.
2. Have ready appropriate mounting hardware. Each module requires sufficient hardware for 4 anchor points.
3. Have ready tools and accessories required to install the mounting hardware.

⚠WARNING

Incomplete or improper mounting may result in property damage and/or personal injury.

Do not install near heat sources or on vibrating surfaces.

The wall and the mounting hardware must be strong enough to support the equipment during normal use.

The equipment must be used only in a normal atmosphere (20.9% v/v O_2) that is free of hazardous gas. Do not use the equipment in a hazardous area. Failure to adhere to this caution can lead to fire and/or explosion.

The equipment is intended for indoor use only.

This equipment uses potentially harmful gas for calibrations. The equipment must be attached to a venting system or be used in a well-ventilated area.

Mounting Individual Modules on a Wall

1. Prepare the modules for mounting.
    1. Disconnect modules that are connected into gangs.
    2. Disconnect the power cord, network cable, tubing and inlet filter assemblies.
    3. Remove the end plate.
2. Detach the back panel.
    1. Hold the module with the back panel facing toward you.
    2. Find the panel latch at the top left side of the module, near the panel hinge.
    3. Press down firmly on the panel latch, and then continue to press down while you slide the panel to the right until the hinge pins are detached.
3. Mark the position of the anchor points on the wall, and then drill the holes.
    1. Hold the panel against the wall in the desired position.
    2. Use a pencil or non-permanent marker to mark the center of the 4 anchor points, and then set the back panel aside.
    3. Drill through the center of each anchor point mark.
4. Secure the panel to the wall with the metal brace facing out. Use appropriate hardware for each of the 4 anchor points. Do not overtighten.
5. Attach the module to the mounted back panel.
    1. Align the hinges and hook receptacles on the module with the hinge pins and hooks on the mounted panel.
    2. When the module lies flat against the mounted panel, push it firmly to the left to lock it onto the panel.
6. Prepare the module for use. For more information, see **Prepare Modules for Use** on page 25.
    1. Attach the end plate. Verify that the latch arm is lowered and locked.
    2. Connect the inlet filters, tubing, network connection and power cord.

Removing an Individual Module from a Mounted Back Panel

1. Disconnect the power cord, network cable, tubing and inlet filter assemblies.
2. Find the panel latch at the top right side of the module, near the panel hinge.
3. Press down firmly on the panel latch, and then continue to press down while you push the module to the right until the hinge pins and hooks are detached. Remove the module.

Mounting Connected Modules on a Wall

1. Prepare the modules for mounting.
    1. Disconnect modules that are connected into gangs.
    2. Disconnect the power cord, network cable, tubing and inlet filter assemblies.
    3. Remove the end plate.
2. Detach the back panel from the modules.
    1. Hold the module with the back panel facing toward you.
    2. Find the panel latch at the top left side of the module, near the panel hinge
    3. Press down firmly on the panel latch, and then continue to press down while you slide the panel to the right until the hinge pins are detached.
3. Mark the position of the anchor points, and drill holes for the first panel.
    1. Hold the panel against the wall in the desired position.
    2. Use a pencil or non-permanent marker to mark the center of the 4 anchor points, and then set the back panel aside.
4. Drill through the center of each anchor point mark.
5. Secure the first panel to the wall with the metal brace facing out. Use appropriate hardware for each of the 4 anchor points. Do not overtighten.
6. Clip the second panel to the first panel, and then secure it to the wall. Use appropriate hardware for each of the 4 anchor points. Do not overtighten. Repeat as necessary to mount up to 5 connected panels.
7. Attach a module to the first panel.
    1. Align the hinges on the module with the hinge pins on the mounted panel. Align the hooks on the mounted panel with the hook receptacles on the module.
    2. When the module lies flat against the mounted panel, firmly push to the left to lock onto the panel. If this is difficult, loosen the mounting hardware slightly and try again.
8. Attach a module to the second panel and connect it to the first module.
    1. Unlock and raise the latch arm on the first module.
    2. Align the hinges on the next module with the hinge pins on the next mounted panel. Align the hooks on the next mounted panel with the hook receptacles on the next module. Align the connections on the modules.
    3. When the next module lies flat against the next mounted panel, firmly push to the left to lock it onto the panel and ensure a full connection with the first module.
    4. Lower and lock the latch arm. Repeat as necessary to attach and connect up to 5 modules.
9. Prepare connected modules for use.
    1. Verify that connected modules are firmly attached and latch arms are lowered and locked.
    2. Attach the end plate to the last module in the gang. Verify that the latch arm is lowered and locked.
    3. Connect the inlet filters, tubing, network connection and power cord.
    4. Verify that each module in the gang is activated and a consecutive bay number is displayed on the LCD. See **LCD Screen** on page 11.

Removing Connected Modules from Mounted Back Panels

1. Disconnect the power cord, network cable, tubing and inlet filter assemblies.
2. Unlock and lift the latch arm between the two modules at the end of the gang.
3. Find the panel latch at the top right side of the module at the end of the gang.
4. Press down firmly on the panel latch, and then continue to press down while you push the module to the right until the hinge pins and hooks are detached. For best results, BW Technologies recommends that you hold the remainder of the gang firmly in position while pushing to help protect the remaining modules in the gang from excessive movement or falls.
5. Repeat steps 2, 3 and 4 until only one module remains.
6. Repeat steps 3 and 4 to remove the final module.

Mount on Parallel DIN Rails

The module is designed for installation on two parallel top hat DIN rails that are 35 millimeters by 7.5 millimeters, as per EN Standard 50022. BW Technologies strongly recommends that mounting is performed by a qualified installation contractor. Sufficient expertise is required to:

1. Determine the strength of the wall supporting the module; and
2. Select DIN rails and mounting hardware appropriate to the weight and normal use of the total number of mounted modules.

What is a DIN Rail?

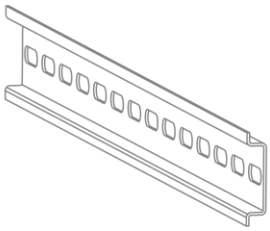

A DIN rail is a metal strip that is used to mount industrial equipment. DIN rail can be cut to suit specific applications. Multiple rows of DIN rail can be used. The module is designed for installation on two parallel top hat DIN rails that are 35 millimeters by 7.5 millimeters, as per EN Standard 50022.

Before You Begin

1. Select a suitable installation location. Each module or gang of connected modules requires:
    - Access to an appropriate power source.
    - Access to a network connection, if using.
    - Access to calibration gas sources.
    - Adequate clearance for the power cord, cables and tubing.
    - Adequate clearance for normal use, maintenance and cleaning.
2. Install two parallel top hat DIN rails that are 35 millimeters by 7.5 millimeters. Use DIN rails that are appropriate for the combined weight and normal use of the total number of mounted modules. Space the DIN rails 15.2 centimeters (6 inches) apart on center.
3. BW Technologies strongly recommends using a DIN rail end plate when mounting in a vehicle, or when lateral motion is possible, or when attaching the first module in a ganged system. If a DIN rail end plate is not available, use the anchor holes in the back panel to secure the module to the wall.

⚠WARNING

Incomplete or improper mounting may result in property damage and/or personal injury.

Do not install near heat sources or on vibrating surfaces.

The wall and the mounting hardware must be strong enough to support the equipment during normal use.

The equipment must be used only in a normal atmosphere (20.9% v/v O_2) that is free of hazardous gas. Do not use the equipment in a hazardous area. Failure to adhere to this caution can lead to fire and/or explosion.

The equipment is intended for indoor use only.

Mounting Modules on Parallel DIN Rails

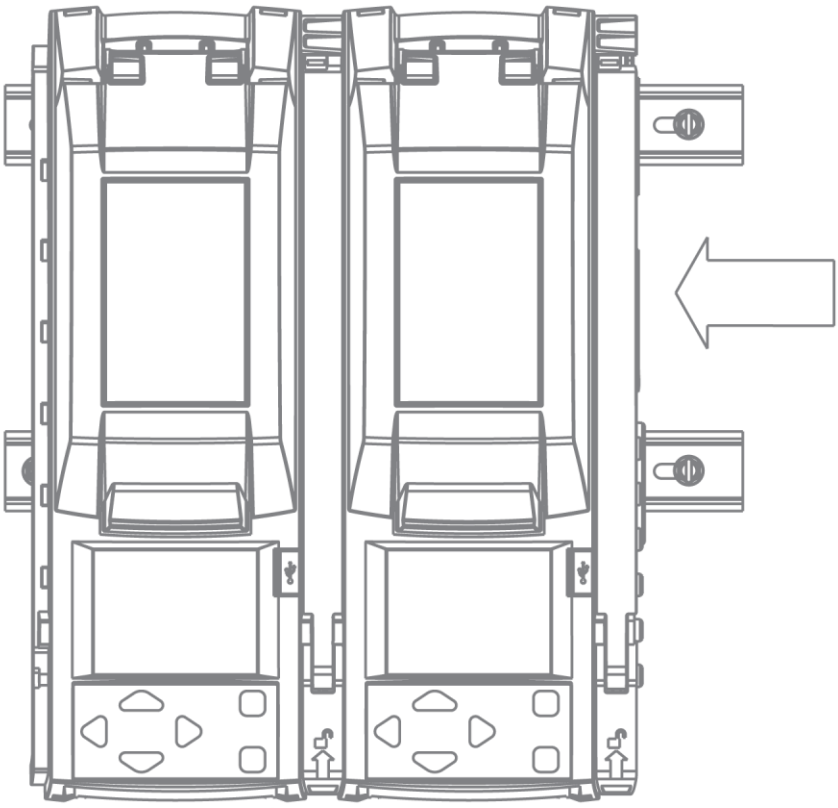

1. Prepare the modules for mounting.
    1. Disconnect modules that are connected into gangs.
    2. Disconnect the power cord, network cable, tubing and inlet filter assemblies.
    3. Remove the end plate.
2. Attach a module to the DIN rails. Repeat as necessary until all modules attached.
    1. Hold the module upright with the back panel toward the DIN rails. Place the top DIN mount over the top of the upper DIN rail and then lower the module toward the lower DIN rail until it snaps into place.
    2. Verify that the module is firmly attached to both the upper DIN rail and the lower DIN rail.
3. Connect the attached modules into gangs of up to 5, if using. Repeat as necessary until all gangs are connected.
    1. Snap the first module into position on the DIN rail, and then unlock and raise the latch arm.
    2. Snap the second module onto the DIN rail, and then slide it into position beside the first module. Push the modules firmly together and then lower and lock the latch arm.
    3. Repeat as necessary until the gang is complete.
4. Prepare the module for use. For more information, see **Prepare Modules for Use** on page 25.
    1. Attach the end plate. Verify that the latch arm is lowered and locked.
    2. Connect the inlet filters, tubing, network connection and power cord.

Removing an Individual Module from Parallel DIN Rails

1. Disconnect the power cord, network cable, tubing and inlet filter assemblies.
2. Remove the end plate.
3. Find the DIN mount lock on the lower right side of the module.
4. Hold the DIN mount lock down, and then tilt the module away from the lower DIN rail until the lower DIN mount is released. Release the DIN mount lock and remove the module from the upper DIN rail.

Removing Connected Modules from Parallel DIN Rails

1. Disconnect the power cord, network cable, tubing and inlet filter assemblies.
2. Remove the end plate.
3. Lift the latch arm between connected modules at the end of the gang.
4. Find the DIN mount lock on the lower right side of the last module. Hold the DIN mount lock down, and then slide the module along the DIN rails until it is separated from the gang.
5. Hold the DIN mount lock down, and then tilt the module away from the lower DIN rail until the lower DIN mount is released. Release the DIN mount lock and remove the module from the upper DIN rail.
6. Repeat steps 3, 4 and 5 until only one module remains.
7. Repeat steps 3 and 4 to remove the final module.

Prepare Modules for Use

This section contains instructions and information related to preparing modules for use. The following topics are included:

Contents

Attach the End Plate **26**
Attaching the End Plate 26
Removing the End Plate 26
Connect the Exhaust Tubing **27**
Connecting the Exhaust Tubing 27
Connect the Inlet filter **28**
Connecting the Inlet Filter 28
Insert the Inlet Plugs **29**
Connect the Power **30**
Connecting the Power 30
Disconnecting the Power 30
Connect the Module to a Network **31**
Before you Begin 31
Connecting the Module to a Network 32
Managing Network Settings through an Internet Browser 32
Default User Name and Password for Internet Browser Access 32
Managing Network Settings through Fleet Manager II Software 34
Connect a Calibration Gas Cylinder **35**
Before You Begin 35
Connecting a Calibration Gas Cylinder 36

Attach the End Plate

The end plate must be attached and locked with the latch arm before connecting power supply or connecting gas cylinders. The end plate must remain securely latched at all times during operation. If the end plate is detached during operation, disconnect power and replace the end plate immediately. Abnormal performance may occur when the end plate is detached or removed.

⚠CAUTION

Failure to comply may result in incorrect or failed compliance tests or calibrations.

Attaching the End Plate

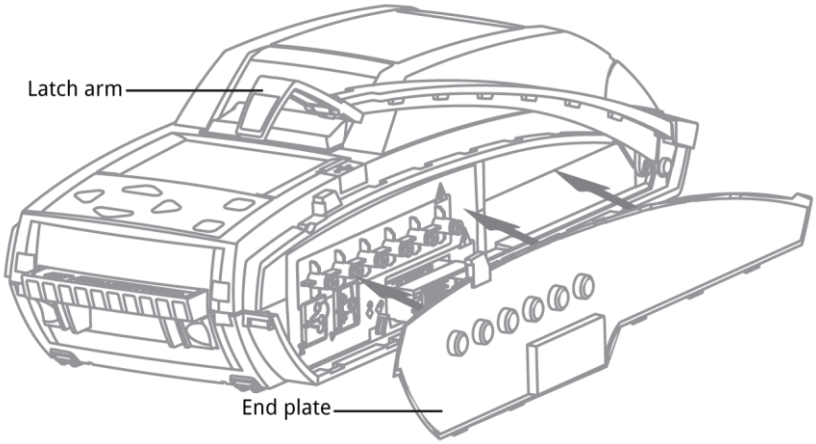

1. Unlock and raise the latch arm.
2. Attach the end plate. Verify that the end plate is firmly attached and set flush with the edge of the module.
3. Lower and lock the latch arm.

Removing the End Plate

1. Unlock and raise the latch arm.
2. Remove the end plate.

Connect the Exhaust Tubing

Each IntelliDoX Enabler Kit includes tubing that may be cut to a length that is appropriate for the exhaust inlet.

⚠WARNING

The maximum recommended exhaust tubing length is 15 meters (49.5 feet).

Ensure the exhaust line is not connected to a negative pressure system.

Connecting the Exhaust Tubing

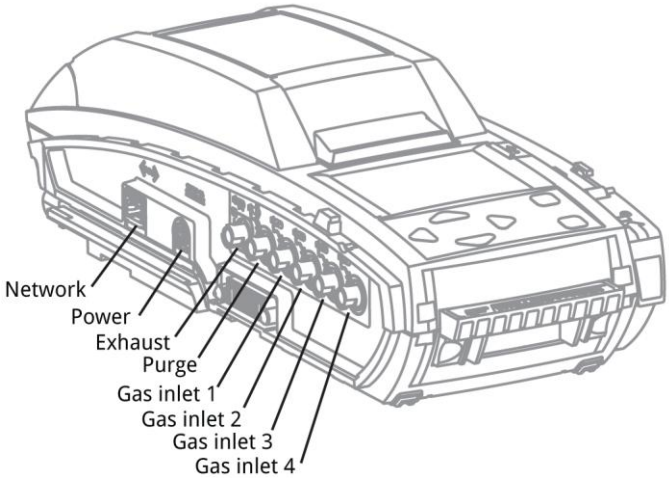

1. Inspect the tubing to ensure that it is free of obstructions and defects.
2. Cut tubing to a length that is appropriate for exhaust, and then attach a male quick connect fitting to one end.
3. Connect the exhaust tubing to the exhaust outlet using the quick connect fitting.
4. Verify that the exhaust tubing is not connected to a negative pressure system, or obstructed in any way.

Connect the Inlet filter

Each IntelliDoX Enabler Kit contains inlet filters. Unless otherwise specified, the purge inlet is configured to use ambient air in a fresh air environment with a normal atmosphere of 20.9% v/v O_2 that is free of hazardous gas. Verify that an inlet filter is attached to the purge inlet and each unused gas inlet before using the module.

Once connected, the inlet filters help to protect the module from dust ingress. For best results, replace the inlet filters periodically, or whenever the inlet filter is damaged or dirty. You may connect an extension tubing to the inlet filter to draw ambient air from an adjacent fresh air environment.

If an inlet filter is damaged, dirty, or missing, replace it immediately. For replacement parts, contact BW Technologies or an authorized distributor.

⚠CAUTION

Failure to comply may result in damaged equipment.

Connecting the Inlet Filter

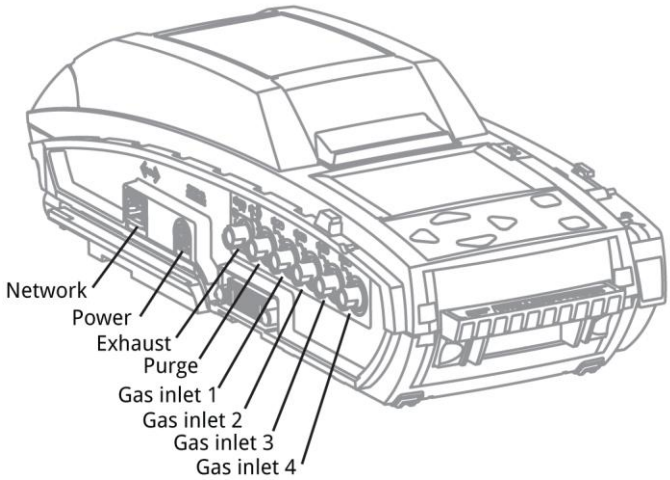

1. Verify that each inlet filter is free of obstructions and defects.
2. Connect an inlet filter to the purge inlet.
3. If necessary, connect an extension tubing to each inlet filter to draw ambient air from an adjacent fresh air environment.

Insert the Inlet Plugs

Each IntelliDoX Enabler Kit contains inlet plugs. Verify that an inlet plug is inserted into each unused gas inlet before using the module. Once inserted, the inlet plugs help to protect the module from dust ingress.

If an inlet plug is damaged or missing, replace it immediately. If plugs are not available, you may use inlet filters instead. For replacement parts, contact BW Technologies or an authorized distributor.

⚠CAUTION

Failure to comply may result in damaged equipment.

Connect the Power

Each IntelliDoX Enabler Kit contains one power supply and AC power cord. Use only the power supply provided in the Enabler Kit to connect the module to an appropriate electrical power outlet. When the power is connected, the module activates and a self-test is performed.

Connecting the Power

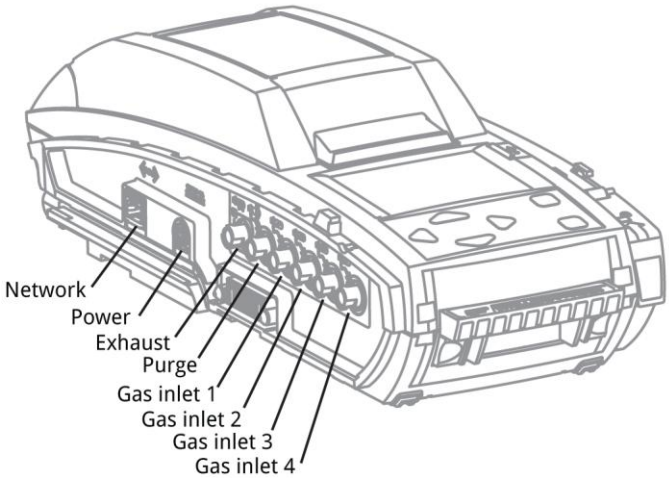

1. Verify that the power supply and power cord provided in the Enabler Kit are compatible with the local power source. If the power supply is not compatible, do not attempt to connect the module to a power source. Contact BW Technologies or an authorized distributor immediately.
2. Connect the AC power cord to the power supply.
3. Connect the power supply into the power connection on the module. Press firmly until you hear a click. The click confirms that the plug is locked.
4. Plug the AC power cord into a suitable wall outlet.
5. When the power is connected, the LCD activates and a self-test is performed.

Disconnecting the Power

To deactivate a module or gang of modules, disconnect the power supply. The module or gang of modules deactivates immediately and without warning.

1. Retract the plastic cover on the plug to unlock it.
2. While the cover is retracted, pull the plug out of the module.

⚠WARNING

To prevent the corruption or loss of data and/or software and/or firmware, do not deactivate the equipment while performing datalog transfers, bump tests, calibrations or other operations.

Connect the Module to a Network

Individual modules and gangs of up to 5 connected modules may be connected to a computer network via an Ethernet cable. Gangs of up to 5 modules share one network connection. Each individual or connected module requires a unique and separate IP address.

You can manage network settings through an internet browser window or via FleetManager II software. When modules are connected to a network, you may use Fleet Manager II software to update firmware, reconfigure modules and detectors, manage datalog transfers, and automate certain administrative functions.

> To improve performance, BW Technologies recommends that you assign a static IP address to each networked module .
>
> To improve security, BW Technologies recommends that you change the password for each networked module.

Before you Begin

1. Verify that you have access to one active network port for each module or gang of up to 5 connected modules. Network ports are usually managed by a network administrator. For more information, contact your network administrator or Help Desk.
2. Have ready one static IP address for each individual or connected module. Static IP addresses are usually provided by a network administrator. For more information, contact your network administrator or Help Desk.
3. Have ready one Ethernet cable for each module or gang of up to 5 connected modules.
4. Verify that the power supply is connected and the module is activated.
5. Verify that you have access to a networked computer that is part of the same network as the module.

Connecting the Module to a Network

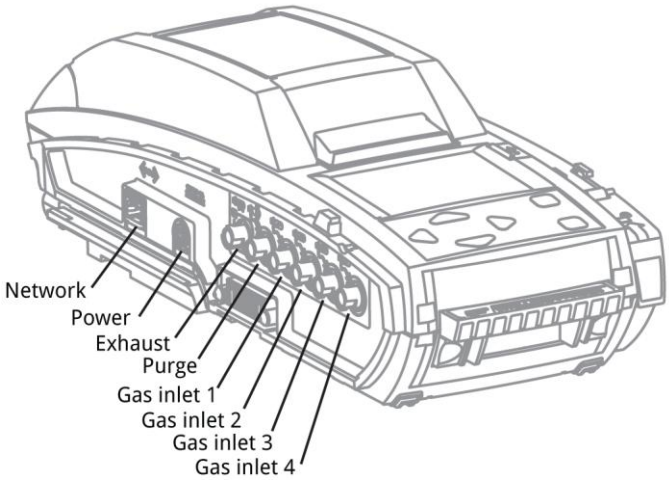

Insert one end of the Ethernet cable into the Ethernet port on the module. Insert the free end of the Ethernet cable into the network outlet. When the module is connected to the network, the network symbol is displayed at the top right corner of the LCD.

If the network symbol is not displayed within several seconds, then follow these steps:

1. Verify that the module is activated.
2. Verify that one end of the Ethernet cable is fully inserted into the Ethernet port on the module, and then verify that the free end is fully inserted into an active network outlet.
3. Press and hold ✔ until the **Adjust docking station settings** menu is displayed. Press ◁ or ▷ to scroll to **About**, and then press ✔ to display the **About** screen. If the IP address displays only zeroes, then the connection is not active.

If problems persist, contact your network administrator or Help Desk.

Managing Network Settings through an Internet Browser

You can change network settings and the administrative password for networked modules through an internet browser. To improve performance, BW Technologies recommends that you assign a static IP address to each networked module. To improve security, BW Technologies recommends that you change the password for each networked module.

Default User Name and Password for Internet Browser Access

The user name and password are case sensitive. BW Technologies recommends that you change the password for each networked module.

- The default user name is **admin**.
- The default password is **admin**.

Changing Network Settings and Password through an Internet Browser Window

1. When the module is successfully connected to a network, display the **About** summary screen, and then record the IP address for the module. To display the **About** summary screen, follow these steps:
    1. Press and hold ✔ until the **Adjust docking station settings** menu is displayed.
    2. Press ◁ or ▷ to scroll to **About**, and then press ✔ to display the **About** screen.
2. From a networked computer, open an internet browser window. In the address bar of the internet browser window, type **http://** followed by the IP address of the module. The **IntelliDoX Login** webpage is displayed in the browser window.

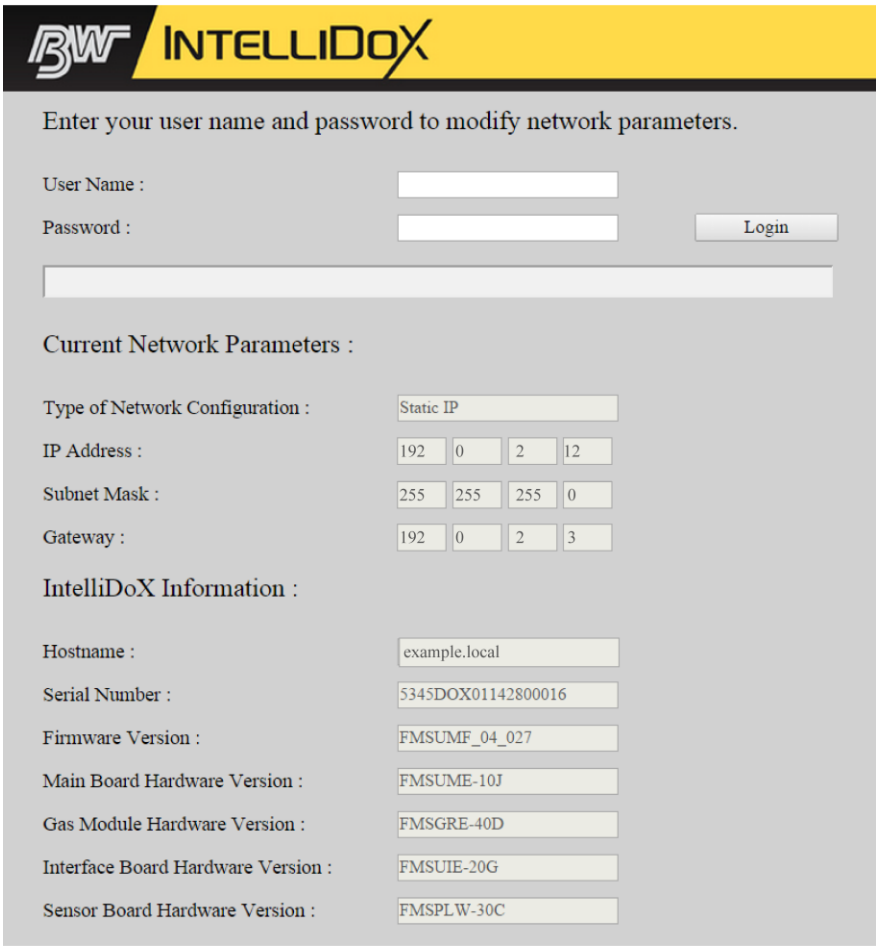

3. Type the user name and password in the text boxes provided, and then click **Login**. The **Enter Your Network Parameters** webpage is displayed in the browser window.

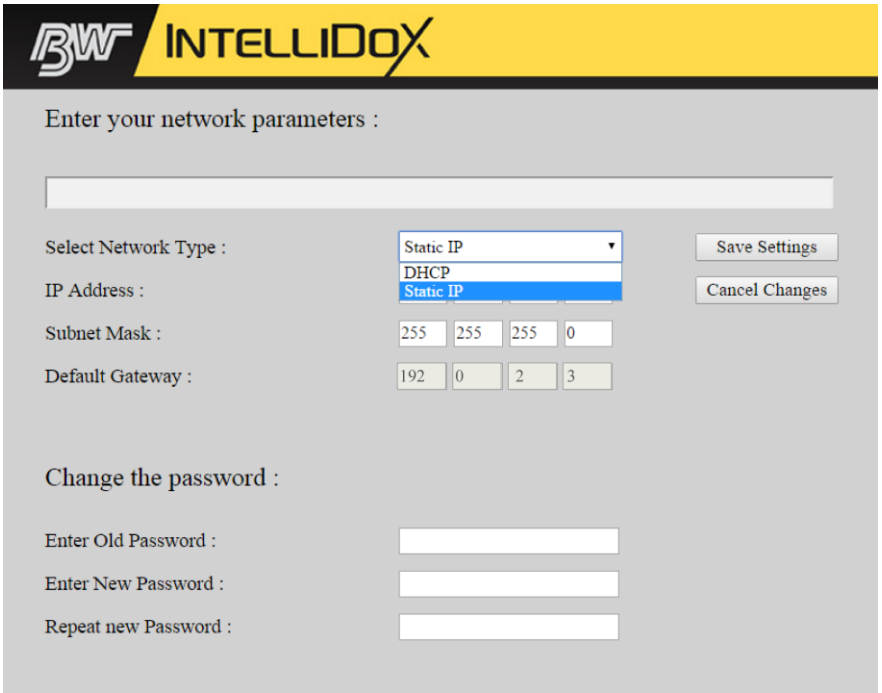

4. Change the **Select Network Type** to **Static IP**, and then type a unique IP address. Unique IP addresses are usually provided by a network administrator or Help Desk. For more information, contact your network administrator or Help Desk.
5. To change the password, type the old password. Type a new password, and then type the new password again. Click **Save** to save your settings and return to the **IntelliDoX Login** webpage, or click **Cancel Changes** to abandon the changes and return to the **IntelliDoX Login** webpage.
6. Close the browser window, or type a different IP address in the browser address bar to change network settings for another module.

Managing Network Settings through Fleet Manager II Software

When you log in to Fleet Manager II software as an administrative user, you can change network settings and the administrative password for networked modules. For more information, refer to the Fleet Manager II operator manual.

Connect a Calibration Gas Cylinder

The IntelliDoX Enabler Kit includes tubing and quick connect fittings that are appropriate for use with calibration gas cylinders that are approved for use with this product. For best results, BW Technologies recommends that the tubing is between 39 inches (1 meter) and 33 feet (10 meters) in length for calibration gas cylinders.

Before You Begin

1. Read and understand the warnings and cautions in this section.
2. Verify that you are in a normal atmosphere (20.9% v/v O_2) that is free of hazardous gas.
3. Verify that the end plate is attached and the latch arm is lowered and locked.
4. Verify that the exhaust tubing is connected, and that it is free of defects and obstructions.

⚠WARNING

The maximum recommended calibration tubing length is 10 meters (33 feet). Use of tubing that is longer than the recommended length may result in inaccurate or failed compliance tests or calibrations.

A demand flow regulator must be used with all calibration gas cylinder connections. The module inlet should not be pressurized.

The use of calibration gas cylinders other than those specified by BW Technologies may result in unsafe calibration or possible non-recoverable failure of the equipment, and will invalidate the warranty.

Do not use calibration gas cylinders past their expiration date.

Ensure that all calibration gas cylinders are in good condition.

Ensure that all calibration gas cylinders contain enough gas.

This equipment uses potentially harmful gas for calibrations. The equipment must be attached to a venting system or be used in a well-ventilated area.

Connecting a Calibration Gas Cylinder

1. Connect a demand flow regulator to the calibration gas cylinder, and then attached the supplied connector with attached 3/16 inch (9.5 millimeter) I.D. tubing to the demand flow regulator.
2. Cut 1/8 inch (3.2 millimeter) I.D. tubing to an appropriate length. BW Technologies recommends that the tubing is between 39 inches (1 meter) and 33 feet (10 meters) in length.
3. Attach one end of the 1/8 inch (3.2 millimeter) I.D. tubing to the demand flow regulator.
4. Insert a quick connect fitting into the free end of the tubing, and then connect it to Inlet 1 on the module.
5. If a multi-inlet key is inserted in an individual module or one or more connected modules in a gang, then repeat steps 1, 2, 3 and 4 as necessary until up to 4 cylinders are attached.
6. Configure the gas inlets before using the module. See **Configure Gas Inlets** on page 41.

Dock Station Settings Menu

This section contains information and instructions for using the **Dock Station Settings** menu.

Contents

Display the Dock Station Settings Menu....38
Displaying the Dock Station Settings Menu 38
Adjust the LCD Brightness....39
Adjusting LCD Brightness 39
Adjust Date and Time Settings 40
Adjusting Time and Date via the Module Settings Menu....40
Configure Gas Inlets 41
Configuring Gas Inlets 41
Display the About Summary Screen 44
Displaying the About Summary Screen 44

Display the Dock Station Settings Menu

Display the **Dock Station Settings** menu when you want to:

1. Adjust the brightness of the LCD screen;
2. Change date and time settings for the module;
3. Configure gas inlet settings for attached calibration gas cylinders; and
4. Display network and other information about the module.

Displaying the Dock Station Settings Menu

1. Press and hold ✔ on the keypad until the Dock Station Settings menu is displayed.

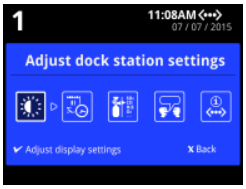

2. Press ◁ or ▷ on the keypad to select a settings option, and then press ✔ to display the option menu.

Adjust the LCD Brightness

When you adjust and save the settings for one module in a gang, the settings for all of the modules in the gang are also changed.

Adjusting LCD Brightness

1. Press and hold ✔ on the keypad until **Adjust dock station settings** is displayed on the LCD.

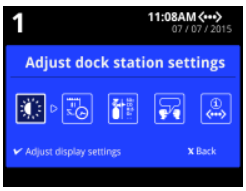

2. Press ◁ or ▷ on the keypad to select **Adjust display settings**, and then press ✔ to display the **Adjust display settings** menu.

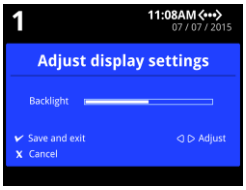

3. Press ◁ or ▷ to adjust the brightness of the LCD screen.

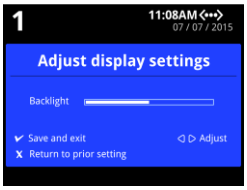

4. Press ✔ to save settings and return to the Dock Station Settings menu, or press ✘ to return to prior settings.

Adjust Date and Time Settings

Follow these instructions when you want to adjust the module time and date settings manually via the **Adjust dock station settings** menu. When you adjust and save the settings for one module in a gang, the settings for all of the modules in the gang are also changed.

Adjusting Time and Date via the Module Settings Menu

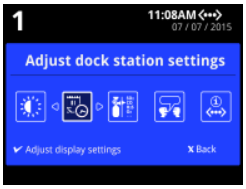

1. Press and hold ✔ on the keypad until **Adjust dock station settings** is displayed on the LCD.
2. Press ◁ or ▷ to select **Adjust time and date** and then press ✔. If the procedure is passcode-protected, then enter the passcode and press ✔ to continue.
3. The **Adjust time and date** menu is displayed and date settings are ready to edit. Edit the date settings, or press X to skip to the time settings.
    1. To set the date, press ◁ or ▷ to select day, month or year, and then press △ or ▽ to change the value.
    2. To change the date format, press ◁ or ▷ until the date labels are selected, and then press △ or ▽ to change the date display to year-month-day, day-month-year, or month-day-year.
4. Press ✔ to save the date settings and continue, or press X to cancel the date changes and go to time settings. The time settings screen is displayed.
5. Edit the time settings, or press X to skip the date settings and return to the **Adjust dock station settings** menu.
    1. To set the time, press ◁ or ▷ to select a hours or minutes, and then press △ or ▽ to change the value.
    2. To change the time format, press ◁ or ▷ until the time format is selected, and then press △ or ▽ to change the clock format to 12-hour or 24-hour.
6. Press ✔ to save the changes and return to the **Adjust dock station settings** menu, or press X to cancel the time settings and return to the **Adjust dock station settings** menu.

Configure Gas Inlets

For each attached calibration gas cylinder, you must configure the gas blend, and then configure each gas type and concentration contained in the gas blend. You may also record the lot number of the calibration gas cylinder.

If a single-inlet key is inserted in an individual module or all connected modules in a gang, then you can attach one calibration gas cylinder. If a multi-inlet key is inserted in an individual module or one or more connected modules in a gang, then, then you can attach up to four calibration gas cylinders. For more information, see **Inlet Keys** on page 9.

If the module is part of a gang of up to 5 connected modules, then changes to the gas inlet settings affect all of the modules in the gang. If the gang contains both single-inlet and multi-inlet key modules, then changes to Inlet 1 affect all modules and changes to Inlets 2, 3 and 4 affect the multi-inlet key modules only.

Configuring Gas Inlets

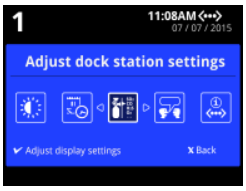

1. Press and hold ✔ on the keypad until **Adjust dock station settings** is displayed on the LCD.
2. Press ◁ or ▷ to select **Configure gas inlets** and then press ✔. If the procedure is passcode-protected, then enter the passcode and press ✔ to continue.
3. The **Inlet overview** for Inlet 1 is displayed. If a multi-inlet key is inserted in an individual module or one or more connected modules in a gang, then four inlet tabs are displayed. Press △ or ▽ to select and configure a different inlet.

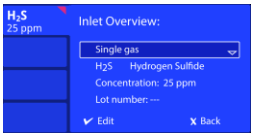

4. Configure the gas blend for the selected inlet.

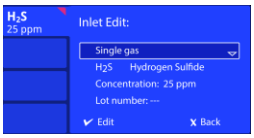

   1. Press ✔ to display the **Inlet edit** menu. **Gas blend** is highlighted.
   2. Press ✔ to select **Gas blend**, and then press △ or ▽ to select a single-gas blend or a multi-gas blend of 2 or more gas types. If the inlet is not connected to a gas cylinder, select **No inlet**.
   3. Press ✔ to save the changes and return to the **Inlet edit** menu, or press ✔ to abandon the changes and return to the **Inlet edit** menu.

5. Configure the gas type for the blend.

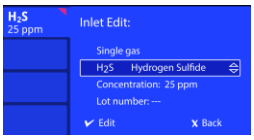

   1. To configure a gas type in a multi-gas blend, select **Gas blend** from the **Inlet edit** menu, and then press ◁ or ▷ to select one of the gases available in the blend.
   2. Select gas type from the **Inlet edit** menu, and then press △ or ▽ to find and select the type of gas. Verify that the gas type selected matches the type of gas contained in the calibration cylinder.
   3. Press ✔ to save the changes and return to the **Inlet edit** menu, or press ✘ to abandon the changes and return to the **Inlet edit** menu.
6. Configure the gas concentration .

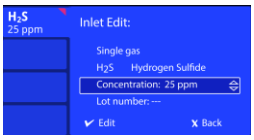

   1. Verify that the gas concentration displayed on the screen matches the gas concentration contained in the calibration gas cylinder. If the concentration does not match, select **Concentration:** from the **Inlet edit** menu, and then press ✔ to edit.
   2. Press △ or ▽ to configure the gas concentration.
   3. Press ✔ to save the changes and return to the **Inlet edit** menu, or press ✘ to abandon the changes and return to the **Inlet edit** menu.
7. Record the lot number of the calibration gas cylinder.

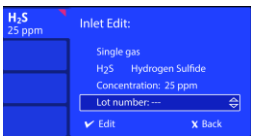

   1. Select the lot number setting from the **Inlet edit** menu.
   2. Press ✔ to edit the lot number, and then press △ or ▽ to find and select alphabetic, numeric and special characters. Press ◁ or ▷ to move to the next character space. Up to 14 characters may be entered.
   3. Press ✔ to save the changes and return to the **Inlet edit** menu, or press ✘ to abandon the changes and return to the **Inlet edit** menu.
8. Repeat steps 3, 4, 5, and 7 until all of the gas inlets are configured.
9. Press ✘ to close the **Inlet edit** menu and return to the **Inlet overview**. Press ✘ again to return to **Adjust dock station settings**.

Display the Select Language Menu

Use the **Select Language** menu to change the docking station's display language. You can select **English**, **French**, **German**, **Spanish**, or **Portuguese**.

1. Press and hold ✔ on the keypad until **Adjust dock station settings** is displayed on the LCD.

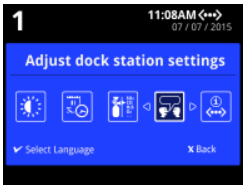

2. Press ◁ or ▷ on the keypad to select **Select Language**, and then press ✔ to display the **Select** Language menu.
3. Press △ or ▽ to select a language.
4. Press ✔ to save settings and return to the **Adjust Dock Station Settings** menu, or press ✘ to return to the prior settings.

Display the About Summary Screen

The **About** information screen displays summary information about the module that may be helpful when you install or configure modules, such as:

1. Module serial number;
2. Versions of firmware and hardware installed on the module;
3. IP address, and
4. MAC address.

Displaying the About Summary Screen

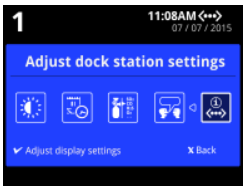

1. Press and hold ✔ on the keypad until **Adjust dock station settings** is displayed on the LCD.
2. Press ✘ to return to the **Adjust dock station settings** menu.

Detector Operations

This section contains information and instructions for inserting a detector and performing certain operations.

Contents

Insert a Detector **46**
Detector Operations Menu **47**
Bump Test **48**
Before You Begin 48
Bump Test Guidelines 48
FastBump 49
Standard Bump Testing 50
Calibration **51**
Before You Begin 51
Calibration Guidelines 51
Calibrating a Detector 52
Transfer Datalogs from a Detector **53**
Transferring Datalogs via the Detector Operations Menu 53
Transferring Datalogs Automatically by Configuring Settings via Fleet Manager II Software 53
Display the Adjust Dock Station Settings Menu **54**
Charge a Detector **55**
Charging a Detector 55

Insert a Detector

1. Verify that the detector is compatible with the module. The detector model must match the model displayed on the module lid.
2. Activate the detector if necessary. If you plan to perform compliance tests, then activate the detector and verify it is in normal operating mode prior to insertion. If you plan to configure a compliant detector prior to activation or charge a rechargeable battery, then activation may not be required. For more information, refer to the appropriate detector operator manual.
3. Press the lid release button and lift the module lid. Insert the detector and then close the lid. **Detector identification** is displayed.
4. When the detector is recognized, procedures specified to occur automatically on insertion are performed. If the detector contains a rechargeable battery, battery charging begins. Progress screens may be displayed while certain procedures are performed.
5. After the detector is recognized and automated procedures are completed, the detector operations menu and **What do you need to do?** are displayed.
6. Press ◁ or ▷ on the keypad to select a menu item. Follow on-screen instructions to perform the selected procedure.
7. After the procedures are completed, you may leave the detector in the module for charging. If the detector is activated, the module will deactivate it after 10 minutes of inactivity and continue charging the battery. When charging is complete, remove the detector from the module.

Detector Operations Menu

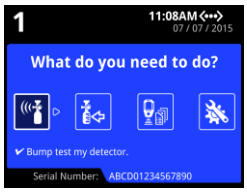

After the detector is recognized and automated procedures are completed, the detector operations menu and **What do you need to do?** are displayed.

Press ◁ or ▷ on the module keypad to select a menu item, and then follow on-screen instructions to perform the selected procedure.

Bump Test

For optimal performance, BW Technologies recommends bump testing detectors before each use. For more information, refer to the appropriate detector operator manual.

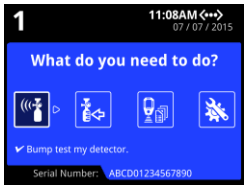

A bump test is a procedure that confirms a detector's ability to respond to target gases by exposing the detector to a known gas concentration. The module supports two types of bump test:

1. FastBump, an accelerated test that performs the bump procedure and event log transfer only; and
2. Standard Bump Test, a test that performs the bump procedure and other procedures specified to occur automatically on insertion, such as datalog transfers or firmware updates.

Before You Begin

1. Read and understand bump test information in the appropriate detector operator manual.
2. Read and understand **Bump Test Guidelines** in this section.
3. Verify that the detector is activated.
4. Verify that the detector is not in a low-battery state.
5. Bump test only in a normal environment that is 20.9% v/v O_2 and free of hazardous gas. Do not operate the docking module in a hazardous area. Failure to adhere to this guideline can result in possible personal injury and/or property damage.

Bump Test Guidelines

1. Perform compliance tests only in a normal environment that is 20.9% v/v O_2 and free of hazardous gas. Do not operate the module in a hazardous area. Failure to adhere to this guideline can result in possible personal injury and/or property damage.
2. The use of gas cylinders other than those specified by BW Technologies may result in unsafe bump tests or possible non-recoverable failure of the equipment, and will invalidate the warranty.
3. Do not use gas cylinders past their expiration date.
4. A demand flow regulator must be used with all gas cylinder connections. The module inlet should not be pressurized.
5. Do not bump test the detector immediately after charging is complete.
6. Bump test the detector if ambient gas readings vary during startup.
7. Allow the sensor to stabilize before starting the bump test.
    1. Used sensor: wait 60 seconds
    2. New sensor: wait 5 minutes
8. When bump testing the same detector multiple times, wait 10 minutes between bump tests to allow the sensors to stabilize.

FastBump

When IntelliDoX is set to FastBump, you see at the top right of the LCD screen.

FastBump is an accelerated compliance test that confirms a detector's ability to respond to target gases by exposing the detector to a known gas concentration. When a compatible detector is inserted into the configured module, FastBump and event log transfers begin automatically after the detector is recognized. Other procedures specified to occur automatically on insertion are suppressed.

What do I Need to Use FastBump?

FastBump can only be performed with a compatible detector via a module that is configured for FastBump. To determine if a FastBump is available, refer to the appropriate detector operator manual.

> You must use Fleet Manager II software to configure the module to automatically FastBump a compatible detector on insertion. For more information, refer to the Fleet Manager II operator manual and the appropriate detector operator manual.

FastBump a Detector

1. Insert a compatible detector into the module. The LCD changes to gray and **Detector identification** is displayed.
2. After the detector is recognized, the LCD changes to yellow and progress messages are displayed. FastBump and event log transfer begin automatically.

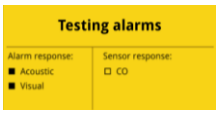

3. When the bump test is successful, the LCD changes to green and **Bump test passed** is displayed.

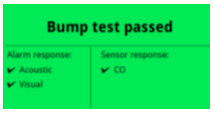

4. If the bump test fails, the LCD changes to red and the **Bump test failed** message is displayed. **X** indicates failed alarm and/or sensor test.

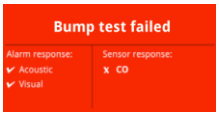

5. To understand how to respond appropriately to failed tests, refer to the appropriate detector operator manual.

Standard Bump Testing

During a standard bump test, the bump procedure and other procedures specified to occur automatically on insertion are performed.

> You must use Fleet Manager II software to configure the module to automatically bump test a compatible detector on insertion. When a compatible detector is inserted into the configured module, the bump test starts automatically after the detector is recognized. Progress screens are displayed while the tests are performed.
>
> You may use Fleet Manager II software to configure the module to automatically calibrate a compatible detector after a failed bump test. When a compatible detector is inserted into the configured module and the bump test fails, then calibration starts automatically. Progress screens are displayed while the tests are performed.

1. Insert a compatible detector into the module. The LCD changes to gray and **Detector identification** is displayed.
2. When the module is configured to perform a standard bump test and other procedures on insertion, the LCD changes to yellow and **Testing Alarms** is displayed after the detector is recognized. Go to step 6.
3. When the module is NOT configured to perform bump test or other procedures on insertion, **What do you need to do?** is displayed after the detector is recognized. Go to step 4.
4. Press ◁ or ▷ to select **Bump test my detector**. If the procedure is passcode-protected, then enter the passcode and press ✔ to continue. Press ✔ to continue.
5. The LCD changes to yellow and the standard bump test begins. Progress screens are displayed while the test procedures are performed.

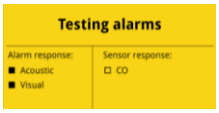

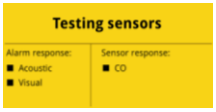

6. When the bump test is successful, the LCD changes to green and **Bump test passed** is displayed. If the module is configured to automatically download datalogs, then the detector datalogs are transferred to the module after the test is complete.

7. Press ✔ to return to the **What do you need to do?** menu.
8. If the bump test fails, the LCD changes to red and the **Bump test failed** message is displayed. X indicates failed alarm and/or sensor test.

9. If the module is configured to automatically calibrate the detector when a bump test fails, then the calibration procedure begins. To understand how to respond appropriately to failed tests, refer to the detector operator manual.

Calibration

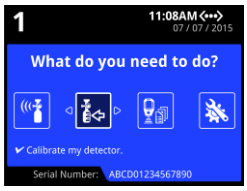

Calibration is a two-step procedure that determines the measurement scale for the detector's response to gas. In the first step, a baseline reading is taken in a clean, uncontaminated environment. In the second step, the sensors are exposed to known concentrations of gas. The detector uses the baseline and known gas concentrations to determine the measurement scale.

Over time and through use, sensor performance may drift from the manufacturer's baseline. For optimal performance, BW Technologies may recommend calibration for certain detector models. To confirm that calibration is recommended, refer to the appropriate detector operator manual.

Before You Begin

1. Verify that calibration is recommended for the detector. Refer to the appropriate detector operator manual.
2. Read and understand **Calibration Guidelines.**
3. Verify that the detector is activated.
4. Verify that the detector is not in a low-battery state.

Calibration Guidelines

1. Perform compliance tests only in a normal environment that is 20.9% v/v O_2 and free of hazardous gas. Do not operate the module in a hazardous area. Failure to adhere to this guideline can result in possible personal injury and/or property damage.
2. The use of calibration gas cylinders other than those specified by BW Technologies may result in unsafe calibration or possible non-recoverable failure of the equipment, and will invalidate the warranty.
3. Do not use gas cylinders past their expiration date.
4. A demand flow regulator must be used with all gas cylinder connections. The module inlet should not be pressurized.
5. Do not calibrate the detector immediately after charging is complete.
6. Calibrate the sensor if ambient gas readings vary during startup.
7. Calibrate a new sensor before use. Allow the sensor to stabilize before starting calibration.
    1. Used sensor: wait 60 seconds
    2. New sensor: wait 5 minutes
8. When calibrating the same detector multiple times, wait 10 minutes between calibrations to allow the sensor to stabilize.
9. If a certified calibration is required, contact BW Technologies or an authorized distributor.

Calibrating a Detector

You may use Fleet Manager II software to configure a detector to automatically perform calibration on insertion if the sensor calibration is overdue. When a compatible detector is inserted into the module and the calibration is overdue, then calibration starts automatically once the detector is recognized. Progress screens are displayed while the tests are performed.

1. Insert a compatible detector into the module. The LCD changes to gray and **Detector identification** is displayed.
2. When the module is configured to perform a calibration on overdue sensors and other procedures on insertion and the calibration is overdue, the LCD changes to yellow and Testing Alarms is displayed after the detector is recognized. Go to step 6.
3. When the module is configured to perform calibration and other procedures on insertion and the calibration is NOT overdue, the other procedures are performed after the detector is recognized. After the procedures are completed, What do you need to do? is displayed on the LCD. Go to step 5.
4. When the module is NOT configured to perform calibration or other procedures on insertion, detector operations menu and **What do you need to do?** are displayed after the detector is recognized. Go to step 5.
5. Press ◁ or ▷ to scroll to **Calibrate my detector**, and then press ✔. The LCD changes to yellow and the calibration begins. Calibration begins. Progress screens are displayed while the tests are performed.

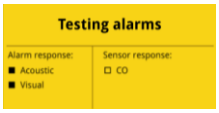

6. If the module is configured via Fleet Manager II software to automatically download datalogs, the detector datalogs are transferred to the module after the calibration is complete.
7. When the calibration is successful, the LCD changes to green and **Calibration passed** is displayed. Press ✔ to return to the detector operations menu.

8. If the calibration fails, the LCD changes to red and **Calibration failed** is displayed. ✘ indicates failed alarm and/or sensor test.

9. To understand how to respond appropriately to failed tests, refer to the appropriate detector operator manual.

Transfer Datalogs from a Detector

There are two ways to transfer datalogs from a detector to the module:

1. Manually, via the module operations menu, or
2. Automatically, by configuring detector settings via Fleet Manager II software.

Transferring Datalogs via the Detector Operations Menu

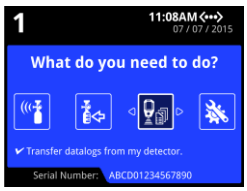

1. Insert a compatible detector into the module. **Detector identification** is displayed on the LCD. After the detector is recognized, procedures specified to occur automatically on insertion are performed.
2. When the module is configured to transfer datalogs on insertion, the datalogs are transferred after other procedures specified to occur automatically on insertion are completed. Go to step 5.
3. When the module is NOT configured to transfer datalogs on insertion, **What do you need to do?** is displayed after the detector is recognized. Go to step 4.
4. Press ◁ or ▷ to select **Transfer datalogs from my detector**, and then press ✔. If the procedure is passcode-protected, then enter the passcode and press ✔ to continue. The LCD changes to yellow. A progress bar and the **Datalog file transfer** message are displayed.
5. When the transfer is complete, the LCD changes to green and **Datalog transfer complete** is displayed. Press ✔ to continue.
6. Open the lid and remove the detector, or perform other procedures.

Transferring Datalogs Automatically by Configuring Settings via Fleet Manager II Software

For more information about creating and transferring configuration settings files via Fleet Manager II software, refer to **Configure Module and Detector Settings**on page 58. For more information about configuring settings via Fleet Manager II software, refer to the Fleet Manager II operator manual.

Display the Adjust Dock Station Settings Menu

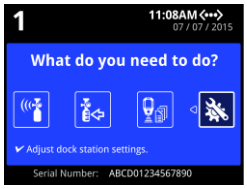

1. Insert a compatible detector into the module. **Detector identification** is displayed on the LCD. After the detector is recognized, procedures specified to occur automatically on insertion are performed.
2. After the detector is recognized and all procedures specified to occur automatically on insertion are completed, the detector operations menu and **What do you need to do?** Are displayed.
3. Press ◁ or ▷ to select **Adjust dock station settings**, and then press ✔.
4. The **Adjust Dock Station Settings** menu is displayed.

Charge a Detector

You may use the module to charge compatible detectors that are fitted with rechargeable batteries. For more information on battery maintenance, refer to the appropriate detector operator manual.

⚠WARNING

Charge only in a normal environment that is 20.9% v/v O_2 and free of hazardous gas. Do not operate the docking module in a hazardous area. Failure to adhere to this guideline can result in possible personal injury and/or property damage.

Charging a Detector

Battery charging is disabled during bump test and calibration procedures.

Do not store the detector in the module.

1. Insert a compatible detector into the module. **Detector identification** is displayed on the LCD.
2. When the detector is recognized, procedures specified to occur automatically on insertion are performed. If the detector contains a rechargeable battery, battery charging begins.
3. After the procedures are completed, you may leave the detector in the module for charging. If the detector is activated, the module will deactivate it after 10 minutes of inactivity and continue charging the battery.
4. When charging is complete, remove the detector from the module.

Configure Settings via Fleet Manager II Software

Certain features, options and settings related to module or detector operations can be configured via Fleet Manager II software. This section contains general instructions for creating and transferring configuration files to modules and detectors via Fleet Manager II software.

Contents

Protect Module Operations with a Passcode....57
Configuring a Module Passcode....57
Configure Module and Detector Settings....58
Workflow: Configuring Settings....58
Creating a Configuration File via Fleet Manager II....58
Transferring the Configuration File to a Module via Fleet Manager II....59
Transferring the Configuration File to a Module via USB Flash Drive....60
Transferring Configuration Settings to a Detector....60
Adjust Time and Date Settings via Fleet Manager II Software....61
Setting the Module Time....61
Adjusting the Clock for Daylight Savings Time....63

Protect Module Operations with a Passcode

You can configure a passcode to control access to certain module operations. When an operation is protected by a password, a lock symbol is displayed with the menu icon. Protected operations that are not performed automatically on insert may be performed only after the correct passcode is entered on the module. You must use Fleet Manager II software to configure and manage the passcode.

Configuring a Module Passcode

1. Start Fleet Manager II software, and then log in as an administrator.
2. Select **Configure Devices via IntelliDoX** on the **Devices** menu. The **IntelliDoX Configuration Selection** dialog box is displayed.

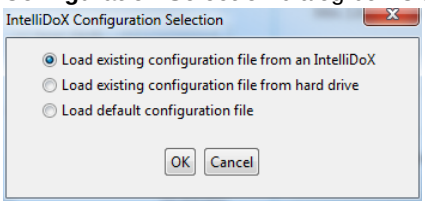

3. Select a configuration file and click **OK**. The **IntelliDoX Device Configuration** dialog box is displayed.
4. Select the tab for a compatible detector, and then select the **IntelliDoX Configuration** tab for the compatible detector.

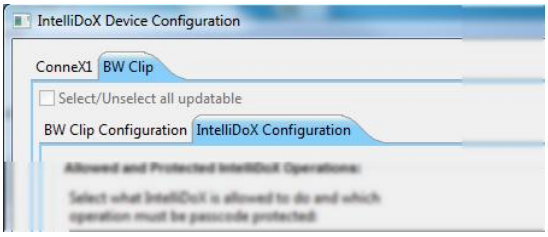

5. In the **IntelliDoX Operations** section, select the operations you want to protect with a passcode.

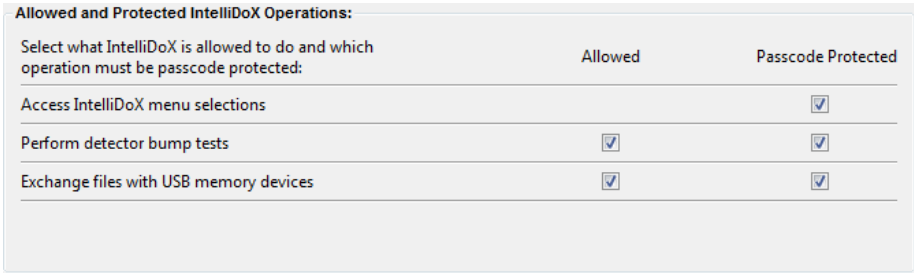

6. In the **IntelliDoX Passcode** section, click ⌃ or ⌄ to select a 4-digit number.

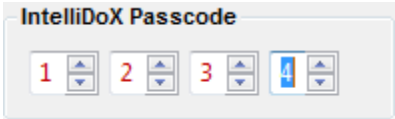

7. Click **Save to IntelliDoX** to transfer the passcode configuration settings to one or more modules. For more information, see **Transferring the Configuration File to a Module via Fleet Manager II** on page 59.

Configure Module and Detector Settings

Certain features, options and settings for the module and/or compatible detectors can be configured through Fleet Manager II software. You must use Fleet Manager II software to create a configuration file that is compatible with the module. After the configuration file is created, transfer it to one or more modules to implement the new configuration settings. For more information, refer to the Fleet Manager II operator manual and the appropriate detector operator manual.

Workflow: Configuring Settings

1. Create the configuration file.
2. Transfer the configuration file to one or more modules via Fleet Manager II software or via USB flash drive.
3. Transfer configuration settings to a detector.

Creating a Configuration File via Fleet Manager II

1. Start Fleet Manager II software, and then log in as an administrator.
2. Select **Configure Devices via IntelliDoX** on the **Devices** menu. The **IntelliDoX Configuration Selection** dialog box is displayed.

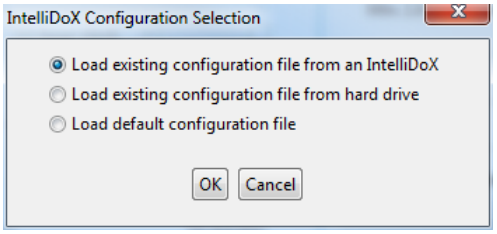

3. Select a configuration file and click **OK**. The **IntelliDoX Device Configuration** dialog box is displayed.
4. Select the tab for a compatible detector, and then select the detector configuration tab. Modify the available detector features, options and settings as required. For more information, refer to the Fleet Manager II operator manual and the appropriate detector operator manual.

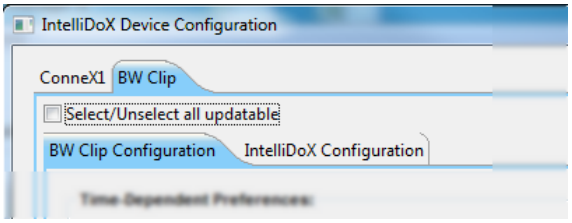

5. Select the **IntelliDoX Configuration** tab. Modify the available features, options and settings as required. For more information, refer to the Fleet Manager II operator manual and the appropriate detector operator manual.
6. Transfer the configuration settings to one or more modules via Fleet Manager II or USB flash drive. For more information, refer to:
   1. **Transferring the Configuration File to a Module via Fleet Manager II** on page 59.
   2. **Transferring the Configuration File to a Module via USB Flash Drive** on page 60.
7. Save the configuration file to PC or network folder, if necessary.

Transferring the Configuration File to a Module via Fleet Manager II

1. Create the configuration file. See **Configure Module and Detector Settings** on page
2. Click **Save to IntelliDoX**. The **IntelliDoX Selection** dialog box is displayed. Select one or more modules, and then click **OK** to transfer the configuration file to the selected modules.

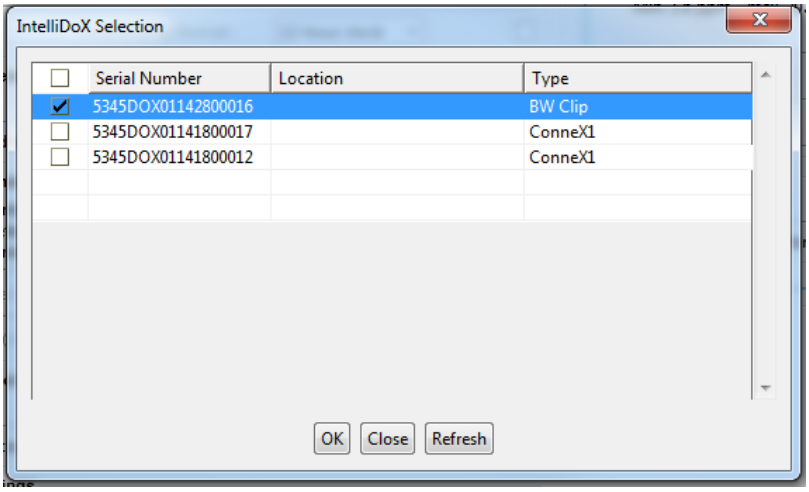

3. After the file is transferred, the **Operation completed** message box is displayed. Click **OK** to return to the **IntelliDoX Device Configuration** dialog box.
4. Verify that the configuration settings are updated on the selected modules.
    1. Start Fleet Manager II software, and then log in as an administrator.
    2. Select **Configure Devices via IntelliDoX** on the **Devices** menu. The **IntelliDoX Configuration Selection** dialog box is displayed.

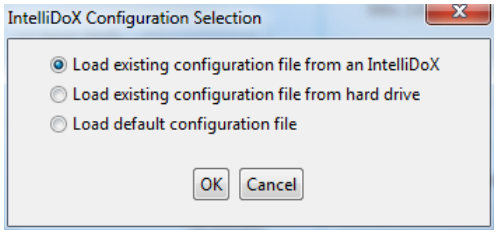

    3. Select **Load existing configuration file from an IntelliDoX**. The **IntelliDoX Selection** dialog box is displayed.
    4. Select a module and then click **OK**. The **Retrieving from IntelliDoX** progress screen is displayed.

    5. After the settings are retrieved, the **IntelliDoX Device Configuration** dialog box is displayed. The serial number of the selected module is appended to the dialog box title bar.

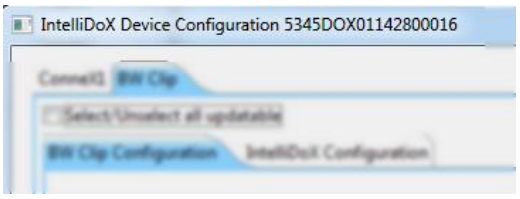

6. Verify that the configuration settings are updated.

5. Repeat steps 3 through 6 until configuration settings are verified for all modules.

Transferring the Configuration File to a Module via USB Flash Drive

For connected modules, transfer the configuration file to each appropriate module in the gang.

1. Insert a USB flash drive into a USB port on your PC. Use Windows Explorer or My Computer to open the USB flash drive, and then create a new folder named **System**.
2. Create the configuration file. See **Creating a Configuration File via Fleet Manager II** on page 58.
3. Click **Save to File**. The **Save Settings to File** dialog box is displayed.
4. Save the configuration file to the **System** folder on the USB flash drive. Do not change the file name or extension. Eject the USB flash drive from the PC.
5. Insert the USB flash drive into the USB port on the module. The **USB File Copy Utility** menu is displayed. Press ▽ or △ to select **Copy to dock** and then press ✔ to continue.
6. The LCD changes to yellow. A progress bar and alternating **Do not remove stick** and **USB transfer in progress** messages are displayed while the file is transferred.
7. After the transfer is successfully completed, the LCD changes to blue and the **USB File Copy Utility** menu is displayed. Press ▽ or △ to select **Exit** and then press ✔ to continue.
8. The LCD changes to green. Remove the USB flash drive from the port when prompted.

Transferring Configuration Settings to a Detector

1. Insert a compatible detector into the module. **Detector identification** is displayed on the LCD.
2. If the detector is configured to update settings on insertion, then the detector settings are updated automatically after the detector is recognized.
3. After the configuration update is completed, other procedures specified to occur on insert are performed.
4. After all procedures are performed, remove the detector from the module and verify that the configuration settings are updated. For more information, refer to the appropriate detector operator manual.

Adjust Time and Date Settings via Fleet Manager II Software

Follow the instructions in this section when you want to adjust the module time and date settings automatically via Fleet Manager II software. For connected modules, you must adjust time and date settings for each module in the gang.

You must use Fleet Manager II when you want to:

- Configure a module or detector to adjust for Daylight Savings Time;
- Synchronize a module time and date to a PC; and
- Configure compatible detectors to synchronize time and date settings to the module when inserted.

For more information, refer to the Fleet Manager II operator manual.

Setting the Module Time

1. Start Fleet Manager II software, and then log in as an administrator.
2. Select **Configure Devices via IntelliDoX** on the **Devices** menu. The **IntelliDoX Configuration Selection** dialog box is displayed.

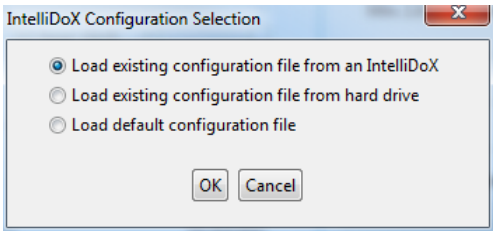

3. Select a configuration file and click **OK**. The **IntelliDoX Device Configuration** dialog box is displayed.
4. Select the tab for a compatible detector, and then select the **IntelliDoX Configuration** tab.

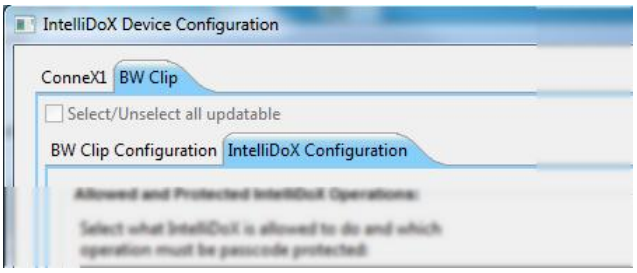

5. Click on the **Time zone** selector. Select your time zone from drop down menu.

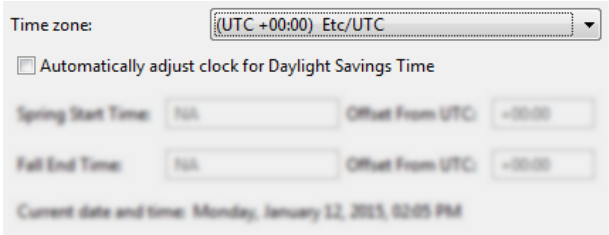

6. Verify that the **Current date and time** displayed under **Timezone settings** is correct. The date is synchronized with the PC on which Fleet Manager II software is installed. If the date is incorrect, change the date on the PC. If the time is incorrect, click on the **Time zone** selector to select a different time zone.
7. When the correct date and time are displayed, click **Set IntelliDoX Time**. The **IntelliDoX Time Confirmation** dialog box is displayed.
8. Click **Save to IntelliDoX**. The **IntelliDoX Selection** dialog box is displayed. Select one or more IntelliDoX modules, and then click **OK**.

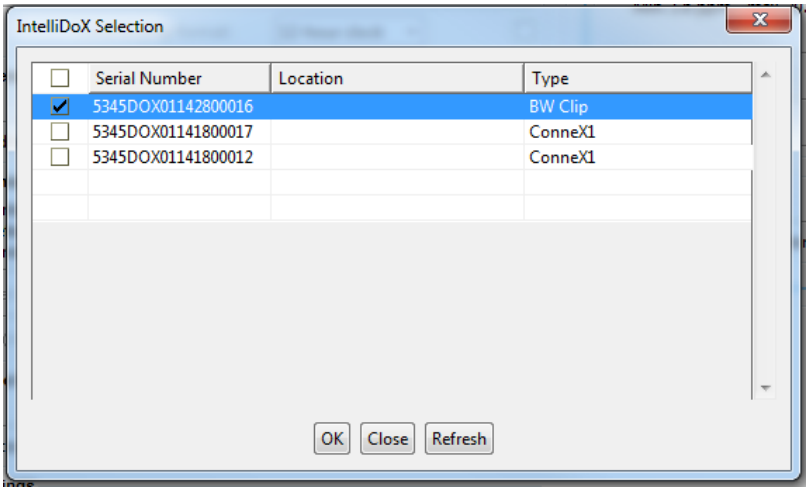

9. The **Saving To IntelliDoX** progress screen is displayed.

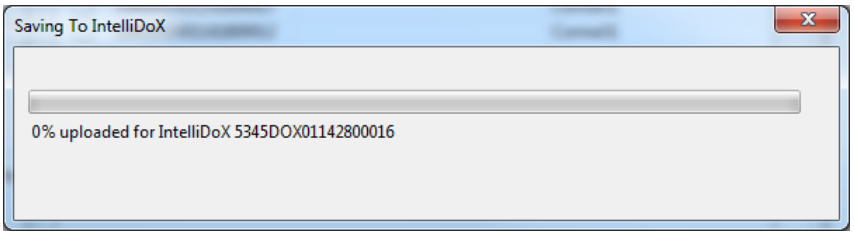

10. When the operation is complete, the **IntelliDoX Device Configuration** dialog box is displayed.

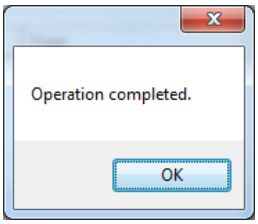

11. Verify that the new data and time settings are displayed on the selected modules.

Adjusting the Clock for Daylight Savings Time

After the module time is set via Fleet Manager II software, you may use Fleet Manager II to configure module and detector clocks to automatically adjust for daylight savings time.

1. Set the module time. See **Setting the Module Time** on page 61.
2. Select the tab for a compatible detector and then select the **IntelliDoX Configuration** tab for the compatible detector.

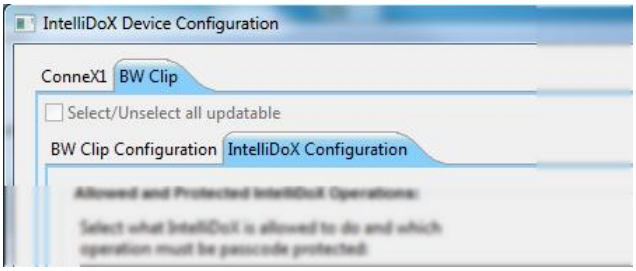

3. Under **Timezone Settings**, select **Automatically adjust clock for Daylight Savings Time**.

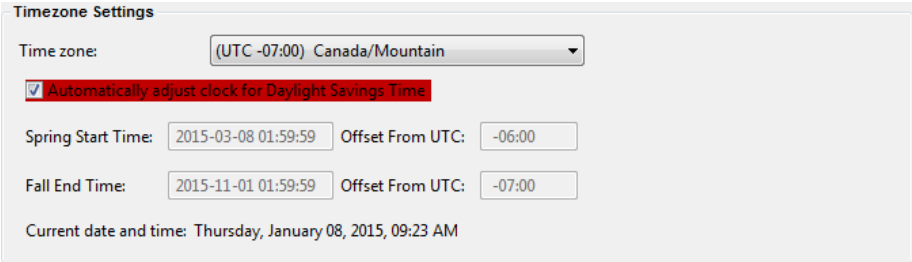

4. Click the **Time zone** selector and then select a time zone from the drop down menu. The next start and end dates for daylight savings time are displayed for the specified time zone.
5. Review and revise other configuration settings if necessary, and then save the configuration file and transfer it to one or more modules. For more information, see **Configure Module and Detector Settings** on page 58.

Hibernation

Hibernation is a factory-installed feature that is available for certain detectors manufactured by BW Technologies. When hibernation is activated, all detector safety functions are disabled and the detector operating life countdown is suspended. Hibernation may extend the service life of the detector, limited by the specified maximum operating life of the detector. It does not extend the specified maximum operating life of the detector.

For more information, refer to the Fleet Manager II operator manual and the appropriate detector operator manual.

Contents

Configure Hibernation 65
Work Plan: Configuring Hibernation.....65
Creating a Hibernation Configuration File.....66
Transferring a Hibernation Configuration File to a Module via Fleet Manager II Software.....67
Transferring a Hibernation Configuration File to a Module via USB Flash Drive.....67
Activating Detector Hibernation 68

Configure Hibernation

You must use Fleet Manager II software to create a configuration file to activate hibernation on insertion. After the configuration file is created, you can use Fleet Manager II software or a USB flash drive to transfer the file to one or more modules. When a module is configured to activate hibernation on insertion, the LCD changes to gray and the hibernation symbol is displayed. All other module functions are disabled.

⚠WARNING

Detectors in hibernation mode do not respond to gas. Do not use detectors in hibernation mode as personal protective equipment (PPE).

Work Plan: Configuring Hibernation

1. Create a hibernation configuration file.
2. Transfer the hibernation configuration file to one or more modules via Fleet Manager II software or USB flash drive.
3. Activate detector hibernation.

Creating a Hibernation Configuration File

1. Start Fleet Manager II software, and then log in as an administrator.
2. Select **Configure Devices via IntelliDoX** on the **Devices** menu. The **IntelliDoX Configuration Selection** dialog box is displayed.

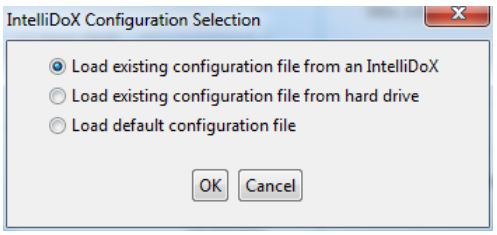

3. Select a configuration file and click **OK**. The **IntelliDoX Device Configuration** dialog box is displayed.
4. Select the tab for a compatible detector that supports hibernation, and then select the **IntelliDoX Configuration** tab.

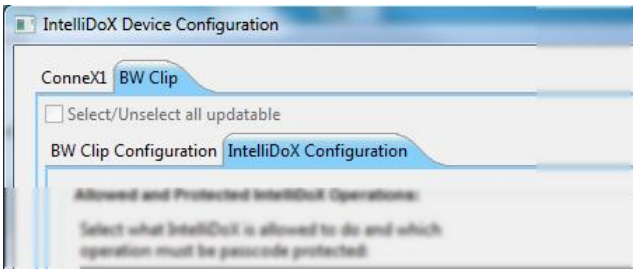

5. Click the **Hibernation** icon to activate hibernation.

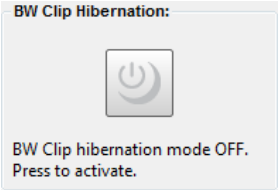

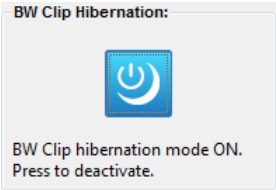

6. The hibernation activation dialog box is displayed. Click **OK** to save the setting, or click **Cancel** to discard the changes.

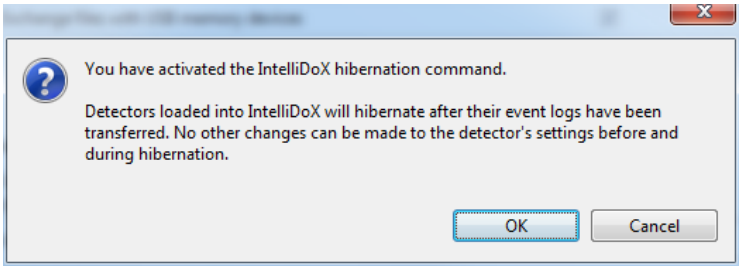

Transferring a Hibernation Configuration File to a Module via Fleet Manager II Software

1. Create the hibernation configuration file. See **Hibernation** on page
2. Click **Save to IntelliDoX**. The **IntelliDoX Selection** dialog box is displayed.
3. Select one or more modules, and then click **OK** to transfer the hibernation configuration file to the selected modules.
4. After the file is transferred, the **Operation completed** message box is displayed. Click **OK** to return to the **IntelliDoX Device Configuration** dialog box.
5. Verify that the selected modules are configured for hibernation.
    1. The LCD is gray.
    2. The hibernation symbol is displayed.

Transferring a Hibernation Configuration File to a Module via USB Flash Drive

For connected modules, transfer the file to each appropriate module in the gang.

1. Insert a USB flash drive into a USB port on your PC. Use Windows Explorer or My Computer to open the USB flash drive, and then create a new folder named **System**.
2. Create the hibernation configuration file. See **Hibernation** on page 64.
3. Click **Save to File**. The **Save Settings to File** dialog box is displayed.
4. Save the hibernation configuration file to the **System** folder on the USB flash drive. Do not change the file name or extension. Eject the USB flash drive from the PC.
5. Insert the USB flash drive into the USB port on the module. The **USB File Copy Utility** menu is displayed. Press ▽ or △ to select **Copy to dock** and then press ✔ to continue.
6. The LCD changes to yellow. A progress bar and alternating **Do not remove stick** and **USB transfer in progress** messages are displayed while the file is transferred.
7. After the transfer is successfully completed, the LCD changes to blue and the **USB File Copy Utility** menu is displayed. Press ▽ or △ to select **Exit** and then press ✔ to continue.
8. The LCD changes to green. Remove the USB flash drive from the port when prompted.
9. Verify that the selected modules are configured for hibernation.
    1. The LCD is gray.
    2. The hibernation symbol is displayed.

Activating Detector Hibernation

1. Verify that the module is configured for hibernation.
    1. The LCD is gray.
    2. The hibernation symbol is displayed.
2. Insert a compatible detector into the module. **Detector identification** is displayed on the LCD.
3. After the detector is recognized, event logs are transferred to the module.
4. After the event log transfer is complete, hibernation is activated on the detector.
5. Remove the detector from the module and store for future use.

To learn more about hibernation, suitable conditions for detector storage, and detector reactivation, refer to the appropriate detector operator manual.

Transfer Data Files

This section contains information and instructions related to transferring data files from detectors to modules and from modules to a PC via Fleet Manager II software or USB flash drive.

Contents

Transfer Data Files from the Module 70
Transferring Data Files via Fleet Manager II Software 70
Scheduling Automatic Data File Transfers via Fleet Manager II Software 71
Transferring Data Files Manually via USB Flash Drive 71

Transfer Data Files from the Module

Each module retains detailed, time-stamped data related to compliance test results and module configuration events. The data are continuously updated, and stored in on-board memory. When the on-board memory has reached capacity, the newest data replaces the oldest data.

Each module also stores event logs and datalogs that are transferred from inserted detectors. When the on-board memory has reached capacity, the newest logs replace the oldest logs.

You can use Fleet Manager II software to transfer and manage data files, or you can transfer the data files to a PC via USB flash drive. Data file transfers may take several minutes to complete when multiple and/or large data files are transferred. For best results, BW Technologies recommends that you transfer data files periodically.

For more information, refer to the Fleet Manager II operator manual and the appropriate detector operator manual.

Transferring Data Files via Fleet Manager II Software

You can use Fleet Manager II software to transfer data from modules that are activated and connected to a network. Data files transferred via Fleet Manager II software are added to the Fleet Manager II database. After the data files are transferred, you can use Fleet Manager II to manage data and prepare custom reports.

1. Start Fleet Manager II software, and then log in as an administrator.
2. Select **Import** from the **Devices** menu. The **Import Device Data** window is displayed.
3. Select **IntelliDoX Import.** The **Getting list of IntelliDoXs** message box may be displayed while Fleet Manager II prepares a list of available modules.
4. Select one or more modules. Select the file types to import, and then set a date range for the records. Click **Import**. A downloading progress bar for each selected module is displayed.
5. When all the progress bars are 100% complete, the **Successfully downloaded logs** dialog box is displayed. Click **OK** to return to Fleet Manager II.

Scheduling Automatic Data File Transfers via Fleet Manager II Software

You can use Fleet Manager II software to schedule automatic data file transfers from modules that are activated and connected to a network. Fleet Manager II software must be operating on a PC that is connected to a computer network when the scheduled transfer is initiated. Fleet Manager II automatically transfers data from specified modules that are activated and connected to the network when the transfer is initiated.

1. Start Fleet Manager II software, and then log in as an administrator.
2. Select **Import** from the **Devices** menu. The **Import Device Data** window is displayed.
3. Select **IntelliDoX Import.** The **Getting list of IntelliDoXs** message box may be displayed while Fleet Manager II prepared a list of available modules.
4. Click **View/Edit Schedule**. The **Gathering the connection status of Scheduled IntelliDoX** message box is displayed while Fleet Manager II gathers information from modules that are active and connected to the network.
5. After the module information is gathered, the **Scheduled Import** dialog box is displayed.
6. Select one or more modules from the **Available IntelliDoX** list, and then click **Add to Schedule**. The selected modules are added to the **Scheduled IntelliDoX** list.
7. Set the date, time and occurrence options under **Next Scheduled For**.
8. Select the log file types to import under **Select Logs**.
9. Select **Next Scheduled For** options, and then select the logs to import.
10. Click **Save** to save the schedule settings. Fleet Manager II processes the scheduled transfer at the specified date and time until the scheduled import is modified or deleted.

For more information, refer to the Fleet Manager II operator manual.

Transferring Data Files Manually via USB Flash Drive

1. For connected modules, you must transfer the data files from each module in the gang.
2. Insert the USB flash drive into the USB port on the module. The **USB File Copy Utility** menu is displayed.
3. Press ▽ or △ to select **Copy from dock**, and then press ✔. The LCD changes to yellow. A progress bar is displayed with alternating **USB transfer in Progress** and **Do not remove stick** messages while the files are transferred.
4. After the transfer is successfully completed, the LCD changes to blue and the **USB File Copy Utility** menu is displayed.
5. Press ▽ or △ to select **Exit**. The LCD changes to green and **USB transfer complete** and **Please remove stick** are displayed. Remove the USB flash drive from the port.
6. Insert the USB flash drive into a USB port on a computer that contains Fleet Manager II software.
7. Start Fleet Manager II software and then select **Import** from the **Devices** menu. The **Import Device Data** window is displayed.
8. Select **Directly From a File.** Click **Choose File** to select one file for import from the USB flash drive, or click **Choose Directory** to select all files in a named folder on the USB flash drive. Click **Import**. A downloading progress bar is displayed.
9. When the progress bar reaches 100% complete, the **Successfully Imported Files** message box is displayed. Click **OK** to return to Fleet Manager.
10. Repeat steps 7 and 8 until all data files are imported.

Update Firmware

BW Technologies is committed to continuously improving product features and performance. As a result, firmware updates may become available for certain products. BW Technologies recommends that you visit the appropriate product site at www.honeywellanalytics.com to find and download the latest firmware version for your products.

Contents

Update Module Firmware 73
Updating Module Firmware via USB Flash Drive.....73
Updating Module Firmware via Fleet Manager II 74
Update Detector Firmware 75
Work Plan: Updating Detector Firmware.....75
Transferring Detector Firmware via USB Flash Drive 75
Transferring Detector Firmware via Fleet Manager II.....76
Updating the Detector Firmware 76
Updating the Detector Firmware 76

Update Module Firmware

BW Technologies is committed to continuously improving product features and performance. As a result, firmware updates may become available for the modules. BW Technologies recommends that you visit the appropriate product site at www.honeywellanalytics.com to find and download the latest firmware version for your modules.

Updating Module Firmware via USB Flash Drive

Follow these instructions to update firmware for an individual module or a gang of up to five connected modules. The update is processed only when the module or gang of modules is idle.

> For connected modules, you must transfer the firmware update to each module in the gang.

1. Download and save the firmware update file to a PC or network drive. Do not rename the file.
2. Transfer the update to a USB flash drive.
   1. Insert a USB flash drive into a USB port on your PC. Use Windows Explorer or My Computer to open the USB flash drive, and then create a new folder named **System**.
   2. Copy the firmware update to the **System** folder on the USB flash drive. Do not change the file name or extension.
   3. Eject the USB flash from the PC.
3. Transfer the file from the USB flash drive to a module.
   1. Insert the USB flash drive into the USB port on the module. The **USB File Copy Utility** menu is displayed.
   2. Press ▽ or △ to select **Copy to dock** and then press ✔ to continue.
   3. The LCD changes to yellow. A progress bar and alternating **Do not remove stick** and **USB transfer in progress** messages are displayed while the file is transferred.
   4. After the transfer is successfully completed, the LCD changes to blue and the **USB File Copy Utility** menu is displayed. Press ▽ or △ to select **Exit**. Press ✔ to continue.
   5. The LCD changes to green. Remove the USB flash drive from the port when prompted.
4. The firmware update begins automatically when the module is idle. If the module is part of a gang of connected modules, then installation begins after all of the modules in the gang are idle.
5. The LCD changes to yellow. **Installing new dock firmware. Please wait …** is displayed.

> Do not deactivate the module during installation.

6. After the update is installed, updated modules restart automatically. **IntelliDoX reboot pending. Please wait…** is displayed. After a few minutes, IntelliDoX rebooting is displayed. The reboot takes about 5 seconds. The screen deactivates briefly while the module restarts.
7. After the installation is complete, the LCD changes to green and **Firmware update complete** is displayed.
8. Verify the version of the installed firmware.

1. Press and hold ✔ on the keypad until **Adjust dock station settings** is displayed on the LCD.
2. Press ◁ or ▷ to select **About**, and then press ✔. The **About this docking module** summary screen is displayed.
3. Read the firmware version information.
4. Press ✖ to return to the **Adjust dock station settings** menu.

9. For connected modules, repeat steps 3 through 7 until all modules in the gang are updated.

Updating Module Firmware via Fleet Manager II

When a module or gang of modules is connected to a network, you may transfer the firmware update file to multiple selected modules via Fleet Manager II software. The update is processed only when the module or gang of modules is idle. You can verify the version of the installed firmware as well as other module details via the **IntelliDoXs** on the **Administration** menu in Fleet Manager II.

For more information, refer to the Fleet Manager II operator manual.

1. Download and save the firmware update file to a PC or network drive. Do not rename the file.
2. Start Fleet Manager II software, and then log in as an administrator.
3. Select **Configure Devices via IntelliDoX** on the **Devices** menu. The **IntelliDoX Configuration Selection** dialog box is displayed.

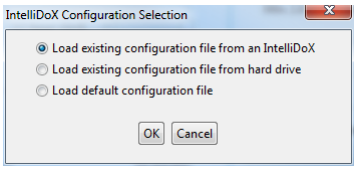

4. Select a configuration file and click **OK**. The **IntelliDoX Device Configuration** dialog box is displayed.
5. Click **Bootloader** at the bottom of the IntelliDoX Device Configuration dialog box. The **IntelliDoX Selection** dialog box is displayed.
6. Click **Choose File**. The **Choose Firmware File To Upload** dialog box is displayed. Select the downloaded file, and then click **Open**. The **IntelliDoX Selection** dialog box is displayed.
7. Select one or more IntelliDoX modules, and then click **OK**. A progress screen is displayed while the firmware update file is automatically transferred to the selected modules. When the transfer is complete, click **OK** to close the dialog box.
8. The firmware update begins automatically when the module is idle. The LCD changes to yellow. **Installing new dock firmware. Please wait …** is displayed. Do not deactivate the module during installation.
9. If the module is part of a gang of connected modules, then installation begins after all of the modules in the gang are idle.
10. After the update is installed, updated modules restart automatically. **IntelliDoX reboot pending. Please wait…** is displayed. After a few minutes, **IntelliDoX rebooting…**. The reboot takes about 5 seconds. The screen deactivates briefly before the module restarts.
11. After the installation is complete, the LCD changes to green and **Firmware update complete** is displayed.
12. Verify the version of the installed firmware.
    1. Select **IntelliDoXs** on the **Administration** menu in Fleet Manager II software.
    2. The **Manage IntelliDoXs** table is displayed. Review the module information.

Update Detector Firmware

BW Technologies is committed to continuously improving product features and performance. As a result, firmware updates for detectors may become available. BW Technologies recommends that you visit the appropriate product site at www.honeywellanalytics.com to find and download the latest firmware version for your modules.

Work Plan: Updating Detector Firmware

1. Download and save the firmware update file to a PC or network drive. Do not rename the file.
2. Transfer the firmware update to a module or gang of modules. See **Transferring Detector Firmware via USB Flash Drive** on page 75 or **Transferring Detector Firmware via Fleet Manager II** on page 76
3. Update the detector. See **Update Detector Firmware** on page 75.
4. Verify the firmware version. For more information, refer to the appropriate detector operator manual.

Transferring Detector Firmware via USB Flash Drive

Follow these instructions to transfer detector firmware via USB flash drive to individual modules, or to modules that are connected in a gang.

For connected modules, transfer the file to each appropriate module in the gang.

1. Download and save the firmware update file to a PC or network drive. Do not rename the file.
2. Insert a USB flash drive into a USB port on your PC. Use Windows Explorer or My Computer to open the USB flash drive, and then create a new folder named **System**.
3. Copy the firmware update to the **System** folder on the USB flash drive. Do not change the file name or extension. Eject the USB flash drive from the PC.
4. Verify that the detector firmware is appropriate for the module, and then transfer the file.
    1. Insert the USB flash drive into the USB port on the module. The **USB File Copy Utility** menu is displayed.
    2. Press ▽ or △ to select **Copy to dock** and then press ✔ to continue.
    3. The LCD changes to yellow. A progress bar and alternating **Do not remove stick** and **USB transfer in progress** messages are displayed while the file is transferred.
    4. After the transfer is successfully completed, the LCD changes to blue and the **USB File Copy Utility** menu is displayed. Press ▽ or △ to select **Exit**. Press ✔ to continue.
    5. The LCD changes to green. Remove the USB flash drive from the port when prompted.

Transferring Detector Firmware via Fleet Manager II

When a module or gang of modules is connected to a network, you may transfer the detector firmware update file to multiple selected modules via Fleet Manager II software. For more information, refer to the Fleet Manager II operator manual.

1. Download and save the firmware update file to a PC or network drive. Do not rename the file.
2. Start Fleet Manager II software, and then log in as an administrator. Select **Configure Devices via IntelliDoX** on the **Devices** menu. The **IntelliDoX Configuration Selection** dialog box is displayed.
3. Select a configuration file and click **OK**. The **IntelliDoX Device Configuration** dialog box is displayed.
4. Click **Bootloader**. The **IntelliDoX Selection** dialog box is displayed.
5. Click **Choose File**. The **Choose Firmware File To Upload** dialog box is displayed. Select the downloaded file, and then click **Open**. The **IntelliDoX Selection** dialog box is displayed.
6. Select one or more IntelliDoX modules, and then click **OK**. A progress screen is displayed while the firmware update file is automatically transferred to the selected modules.
7. When the transfer is complete, click **OK** to close the dialog box.

Updating the Detector Firmware

Modules must be configured via Fleet Manager II software to enable firmware updates on insertion for compatible detectors. For more information, see **Configure Module and Detector Settings** on page 37.

1. Insert a compatible detector into the module. **Detector identification** is displayed on the LCD.
2. If the module is configured to perform a firmware update and other procedures on insertion and a firmware update is available, then the detector event logs are automatically transferred to the module and the firmware update begins.
3. The LCD changes to yellow. A progress bar and the **Detector firmware upgrade** message are displayed.
4. After the upgrade is completed, the detector reboots. Alternating **Detector rebooting** and **Do not open lid** messages are displayed.
5. When the reboot is successful, the LCD changes to green and the **Firmware upgrade complete** message is displayed. Other procedures specified to occur automatically on insertion are performed.
6. After all operations are completed, verify the firmware update.
    1. Open the lid and remove the detector.
    2. Verify the firmware version. For more information, refer to the appropriate detector operator manual.

Replace Detector Cradle and Calibration Insert

This section contains information and instructions related to replacing an IntelliDoX detector cradle and calibration insert.

Contents

Replace Detector Cradle and Calibration Insert 77
Upgrade the IntelliDoX to Fit Compatible Detectors 77
What You Need to Replace the Detector Cradle and Calibration Insert 77
Replace the Detector Cradle 78
Replace the Calibration Insert 80

Upgrade the IntelliDoX to Fit Compatible Detectors

The IntelliDoX system is designed for users to upgrade their detector docking solution to meet their changing needs. The IntelliDoX allows users to upgrade from one detector to another with the replacement of the detector cradle and calibration insert.

What You Need to Replace the Detector Cradle and Calibration Insert

- A Philips screwdriver to remove the screws on the IntelliDoX

IMPORTANT: You must transfer data files from the IntelliDoX before you replace the cradle and calibration insert.

Here's what you'll do to replace the cradle and calibration insert:

1. Transfer data from the IntelliDoX (see Transfer Data Files on page 69).
2. Update the firmware on the IntelliDoX to a compatible version, if required (see Update Firmware on page 72).
3. Replace the cradle on the IntelliDoX.
4. Replace the calibration insert on the IntelliDoX.

Replace the Detector Cradle

To replace the cradle, remove the cradle from the IntelliDoX (unscrew the screws and unplug the connector), and then install the replacement cradle.

1. Disconnect the power cord, network cable, tubing, and inlet filter assemblies from the IntelliDoX.
2. Use a screwdriver to unscrew the two screws from the cradle.

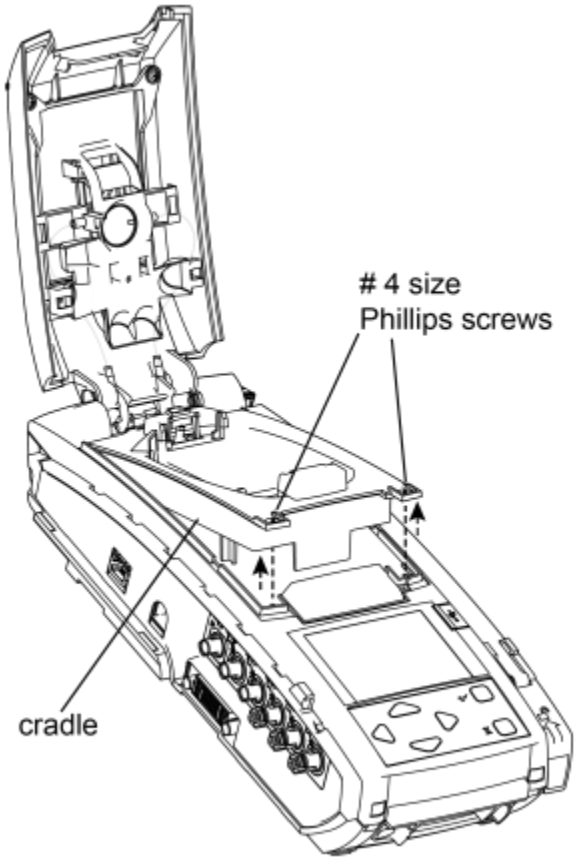

3. Lift the cradle, hold the connector at the end of the cable, and pull to unplug the cable from the circuit board.

⚠CAUTION Do not pull on the cable to unplug the cable. You can cause damage to the cable. Hold the end connector.

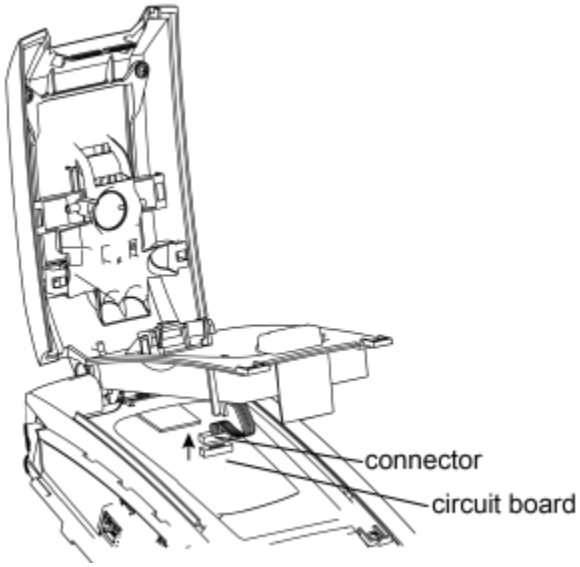

4. Remove the cradle from the IntelliDoX.
5. Get the replacement cradle.
6. Plug the replacement cradle's connector cable into the circuit board.
7. Slide the replacement cradle's tabs under the IntelliDoX top assembly to place the cradle into the IntelliDoX.

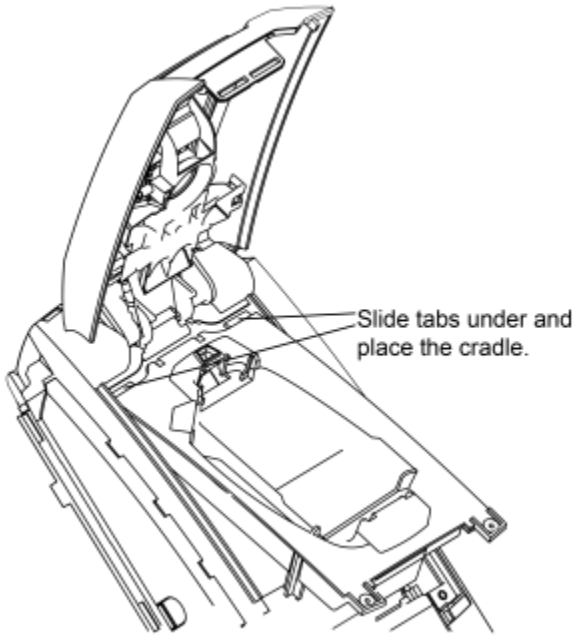

8. Use a screwdriver to fasten the two screws on the replacement cradle.

Replace the Calibration Insert

To replace the calibration insert, remove the calibration insert from the IntelliDoX (unscrew the screws and detach the gas tubes), and then install the replacement calibration insert.

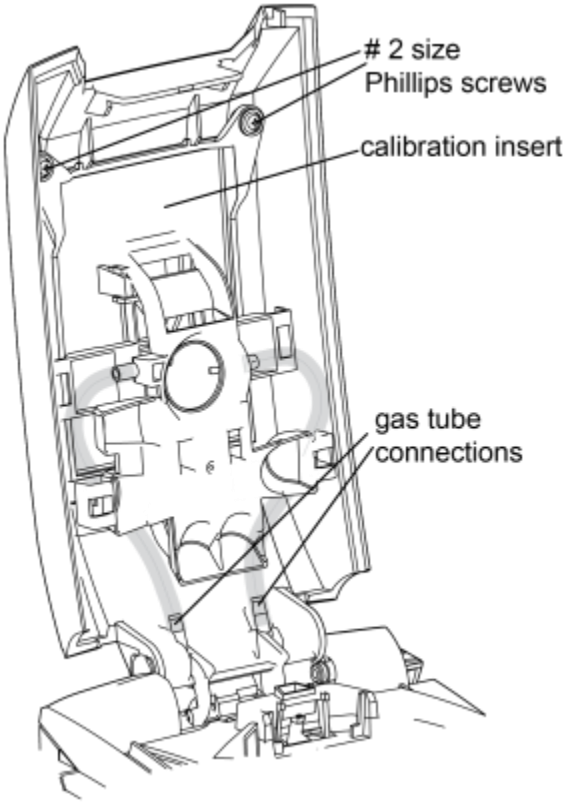

1. Disconnect the power cord, network cable, tubing, and inlet filter assemblies from the IntelliDoX.
2. Use a screwdriver to unscrew the two screws from the calibration insert.
3. Detach the two gas tubes from the IntelliDoX.
4. Remove the calibration insert.
5. Get the replacement calibration insert.

6. Slide the calibration insert tabs under the IntelliDoX lid assembly to place the replacement calibration insert into the IntelliDoX.

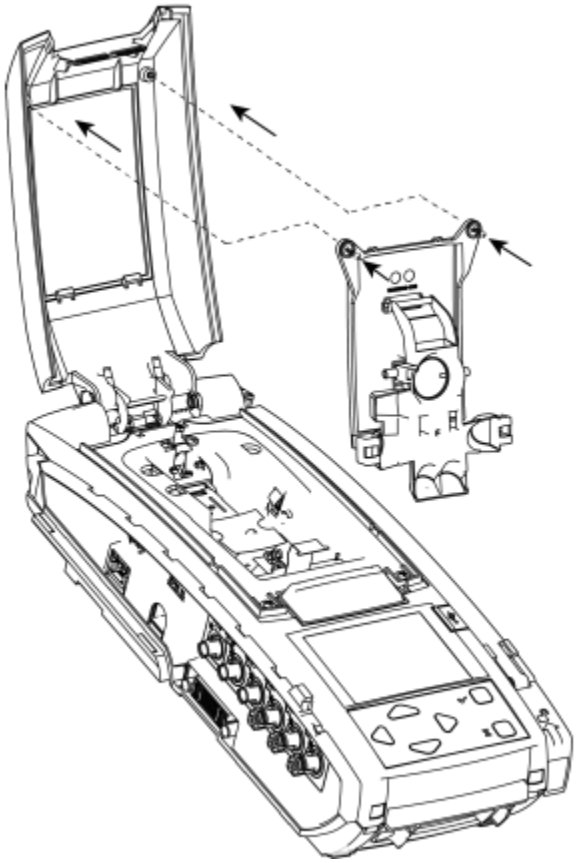

7. Use a screwdriver to fasten the two screws on the replacement calibration insert.
8. Connect the gas tubes to the IntelliDoX.

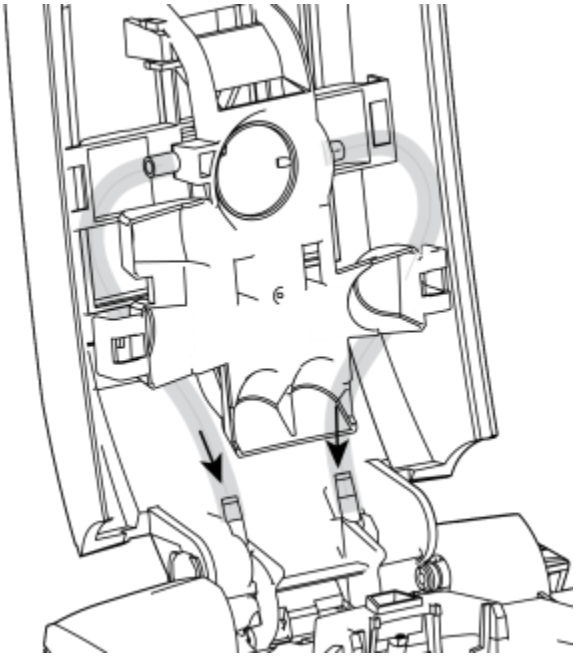

Maintenance

This section contains general information related to cleaning and maintenance, replacement parts and accessories, and calibration equipment and accessories

Contents

Clean and Maintain the Module.....83
Before You Begin.....83
Basic maintenance 83
Replacement Parts and Accessories 83
Calibration Equipment and Gases.....84

Clean and Maintain the Module

Before You Begin

1. Disconnect power before performing maintenance or cleaning.
2. To avoid personal injury or damage to the module, use only replacement parts and/or accessories obtained from BW Technologies or an authorized distributor.
3. No user-serviceable parts are inside the module.
4. If the module is damaged, contact BW Technologies or an authorized distributor.

⚠WARNING

If the equipment is damaged or parts are missing, contact BW Technologies immediately.

Substitution of components may impair the safety of the equipment.

Do not attempt to disassemble, adjust, or service the equipment unless instructions are provided to perform a procedure, or a component is listed as a user-replaceable component in the user manual. Use only BW Technologies replacement components.

Do not expose the equipment to electrical shock or severe and/or continuous mechanical shock.

Do not immerse the equipment in liquids.

Basic maintenance

To maintain the module in good operating condition, perform the following basic maintenance as required:

1. Maintain a log of all maintenance that is performed.
2. Clean the exterior with a soft, damp cloth.
   - Do not immerse in liquids.
   - Do not use solvents, soaps or polishes.
3. Confirm that the inlet filter is free of dirt. Replace if required.

Once service is complete, reconnect the power supply. When power is connected, the LCD activates and self-test is performed.

Replacement Parts and Accessories

Replaceable parts are sold separately. To receive a complete list of replaceable parts approved for use with this product, contact BW Technologies or an authorized distributor, or visit the product website at www.honeywellanalytics.com

Gas detectors, calibration and purge gas cylinders, and other accessories are sold separately. To receive a complete list of calibration gases and accessories approved for use with this product, contact BW Technologies or an authorized distributor, or visit the product website at www.honeywellanalytics.com.

Calibration Equipment and Gases

⚠WARNING

The use of calibration gas cylinders other than those specified by BW Technologies may result in unsafe calibration or possible non-recoverable failure of the equipment, and will invalidate the warranty.

A demand flow regulator must be used with all calibration gas cylinder connections. The module inlet should not be pressurized.

To receive a complete list of calibration gases and accessories approved for use with this product, contact BW Technologies or an authorized distributor, or visit the Order Information section of the product website at www.honeywellanalytics.com.

Technical Specification and Warranty

This section includes the technical specification and warranty for the module.

Contents

Technical Specification **86**
Limited Warranty and Limitation Liability **87**
Warranty Registration 87

Technical Specification

Dimensions
14.2 x 5.4 x 4.3 in (361 x 137 x 109 mm)

Weight
4.2 lb (1.9 kg)

Base system ingress protection
IP20

Enclosure
Impact resistant polycarbonate and acrylonitrile butadiene styrene (PC+ABS)

Operating temperature
+50°F to +95°F (+10°C to +35°C)

Humidity
10% to 90% non-condensing

Altitude
Maximum 6 561 feet (2 000 meters)

Storage temperature
+14°F to +140°F (-10°C to +60°C)

Power supply
12 V 8.33A ITE power supply

Type of equipment
Process Control Equipment

Equipment class
Cord-connected, Class III

Pollution degree
2

Installation category
I

Mode of operation
Continuous

Real-time clock
Provides date and time stamp

Data storage
2 gigabytes of on-board memory

External interface
Ethernet

Pump flow rate
350 mL per minute

Calibration gas cylinder inputs
1 or 4 gas inlets
1 ambient air (purge) inlet

Automatic tests
Functional bump test; calibration; data transfer; audible alarm; visual alarm

Configuration recognition
Automatic instrument and sensor

Alarm/calibration parameters
User-defined

Calibration gas connections
Built-in

Gas connection
3.2 mm (1/8 in) sub-miniature connect (SMC) coupling

Solenoid
Built-in

LCD Background
Gray: Idle
Blue: Prompt for user action
Yellow: Activity in progress
Green: Activity completed
Red: Warning

Keypad

- ▷ Scroll right
- ◁ Scroll left
- △ Scroll up
- ▽ Scroll down
- ✔ Press and hold until the module settings menu is displayed. Press and release to select a menu item or save changes.
- X Press and hold until an operation is cancelled. Press and release to close a menu item or return to a previous screen or cancel changes.

Communications method
Two-way infrared between docking module and detector

Ports
1 USB port
1 Ethernet port, for connection to a computer network

Sensors
Audio and optical

Warranty
2 years beginning at date of shipment to the buyer

FCC
NOTE: This equipment has been tested and found to comply with the limits for a Class A digital device, pursuant to part 15 of the FCC Rules. These limits are designed to provide reasonable protection against harmful interference when the equipment is operated in a commercial environment. This equipment generates, uses, and can radiate radio frequency energy and, if not installed and used in accordance with the instruction manual, may cause harmful interference to radio communications. Operation of this equipment in a residential area is likely to cause harmful interference in which case the user will be required to correct the interference at his own expense.
FCC CAUTION: Any changes or modifications not expressly approved by the party responsible for compliance could void the user's authority to operate the equipment.

Limited Warranty and Limitation Liability

BW Technologies LP (BW) warrants the product to be free from defects in material and workmanship under normal use and service for a period of two years, beginning on the date of shipment to the buyer. This warranty extends only to the sale of new and unused products to the original buyer. BW's warranty obligation is limited, at BW's option, to refund of the purchase price, repair or replacement of a defective product that is returned to a BW authorized service center within the warranty period. In no event shall BW's liability here under exceed the purchase price actually paid by the buyer for the Product.

This warranty does not include:

- fuses, disposable batteries or the routine replacement of parts due to the normal wear and tear of the product arising from use;
- any damage or defects attributable to repair of the product by any person other than an authorized dealer, or the installation of unapproved parts on the product; or
- any product which in BW's opinion, has been misused, altered, neglected or damaged, by accident or abnormal conditions of operation, handling or use.

The obligations set forth in this warranty are conditional on:

- proper storage, installation, calibration, use, maintenance and compliance with the product manual instructions and any other applicable recommendations of BW;
- the buyer promptly notifying BW of any defect and, if required, promptly making the product available for correction. No goods shall be returned to BW until receipt by the buyer of shipping instructions from BW; and
- the right of BW to require that the buyer provide proof of purchase such as the original invoice, bill of sale or packing slip to establish that the product is within the warranty period.

THE BUYER AGREES THAT THIS WARRANTY IS THE BUYER'S SOLE AND EXCLUSIVE REMEDY AND IS IN LIEU OF ALL OTHER WARRANTIES, EXPRESS OR IMPLIED, INCLUDING BUT NOT LIMITED TO ANY IMPLIED WARRANTY OF MERCHANTABILITY OR FITNESS FOR A PARTICULAR PURPOSE. BW SHALL NOT BE LIABLE FOR ANY SPECIAL, INDIRECT, INCIDENTAL OR CONSEQUENTIAL DAMAGES OR LOSSES, INCLUDING LOSS OF DATA, WHETHER ARISING FROM BREACH OF WARRANTY OR BASED ON CONTRACT, TORT OR RELIANCE OR ANY OTHER THEORY.

Since some countries or states do not allow limitation of the term of an implied warranty, or exclusion or limitation of incidental or consequential damages, the limitations and exclusions of this warranty may not apply to every buyer. If any provision of this warranty is held invalid or unenforceable by a court of competent jurisdiction, such holding will not affect the validity or enforceability of any other provision.

Warranty Registration

www.honeywellanalytics.com/support/product-registration

Glossary

The following term and abbreviations are used in this document.

A

AC
Alternating current. An electric current that is usually accessed by plugging a power cord into a wall outlet.

B

Bump test
A compliance test that confirms the detector's ability to respond to target gases by exposing the detector to a known gas concentration. Other procedures that are specified to occur automatically when the detector is inserted into a docking module may be performed in conjunction with the bump test.

C

Calibration
A two-step compliance test that determines the measurement scale for the detector's response to gas. In the first step, a baseline reading is taken in a clean, uncontaminated environment. In the second step, the sensors are exposed to known concentrations of gas. The detector uses the baseline and known gas concentrations to determine the measurement scale.

CD
Compact disc. A computer-readable disc.

Compliance test
A compliance test is a procedure designed to confirm that a product or process meets a defined set of standards.

D

Datalog
A datalog is a file that contains detailed, date-stamped records related to detector operations and configuration settings. The datalog is continuously updated. Records that span the operating life of the detector are retained. For more information, refer to the appropriate detector operator manual.

DC
Direct current. DC is an electric current that is provided by power sources such as batteries and solar cells.

DHCP
Dynamic Host Configuration Protocol. DHCP is a network protocol for assigning an unused IP address to a device that connects to a network.

DIN rail
A DIN rail is a metal strip that is used to mount industrial equipment and devices.

Dynamic IP address
A temporary IP address that is automatically assigned to a device when it connects to a network, and then automatically released when it disconnects.

E

Event log
An event log is a file that contains detailed, time-stamped records data related to gas events, compliance tests, and auto zero operations. The event log is updated when an event occurs. A specified number records for the most recent events is retained. For more information, refer to the appropriate detector operator manual.

F

FastBump
FastBump is an accelerated compliance test that confirms a detector's ability to respond to target gases by exposing the detector to a known gas concentration. FastBump may only be performed with a compatible detector via a module that is configured for FastBump. When a compatible detector is inserted into the configured module, FastBump and event log transfer start automatically once the detector is recognized. Other procedures specified to occur automatically on insertion are suppressed.

Firmware
Permanent software or coded instructions that are programmed into read-only memory on a device. Firmware provides the operating instructions for a device, and may be updated periodically to enhance device performance.

Fleet Manager II
A proprietary, Windows-based software developed by BW Technologies to configure and manage docking modules, calibration, bump tests, and datalogs. Fleet Manager II is available for download from www.honeywellanalytics.com

G

Gang
A group of two (2) to five (5) connected IntelliDoX modules. Modules that are connected share power, network and gas connections.

H

Hibernation
Hibernation is a factory-installed feature that is available for certain detectors manufactured by BW Technologies. When Hibernation is activated, all detector safety functions are disabled and the operating life countdown is suspended. Hibernation may be activated when the detector is not required for operational service for periods from 7 days up to one year. Hibernation may extend the service life of the detector, limited by the specified maximum operating life of the detector. It does not extend the specified maximum operating life of the detector.

I

I.D.
I.D. is a measurement that represents the inner diameter of a tubing or pipe.

Instrument Management System
An instrument management system (IMS) is a network of IntelliDoX automated test and calibration stations, Fleet Manager II instrument management software, compatible detectors, and other integration equipment.

IntelliDoX Docking Module
An IntelliDoX docking module (module) is an automatic bump test and calibration docking station for use with portable gas detectors manufactured by BW Technologies.

IP
Internet Protocol. A protocol that is used to send data from one device to another on the Internet. Each device connected to an IP network must have at least one unique IP address to distinguish it from other connected devices.

IP address
A unique value that is assigned to a device when it connects to a network that uses the Internet Protocol for communication. Each device connected to an IP network must have at least one unique IP address to distinguish it from other connected devices.

IR
Infrared. IR is an invisible radiant energy that can be used for short-range wireless communications between enabled devices.

L

LCD
Liquid crystal display. LCD is a technology that is commonly used for display screens on mobile digital devices.

M

MAC
Media Access Control. MAC is a data communication protocol that supports communication between nodes on the same or other networks.

MAC address
A unique code assigned to any device that has built-in networking capability. The MAC address is assigned at the factory, by the device manufacturer.

Multi-inlet key
A removable insert that is compatible with the IntelliDoX Docking Module. When the multi-inlet key is inserted, up to four gas inlets may be configured for use in the module.

N

Normal atmosphere
A normal atmosphere is a fresh air environment with 20.9% v/v oxygen (O_2) that is free of hazardous gas

O

Operating Life
The period of operational use required to attain the specified operating limit. Operating life includes normal operating time, alarm time, and all types of idle time.

P

PDF
Portable Document Format. PDF is a file format developed by Adobe as a means to distribute compact, platform-independent documents. To view PDF files, download and install Adobe Reader from www.adobe.com

PPE
Personal protetective equipment

PPM
Parts per million, a measure of concentration.

R

Reboot
Restart the operating system for the module

S

Service Life
The expected lifetime of a product, as specified by the manufacturer.

Single-inlet key
A removable insert that is compatible with the IntelliDoX Docking Module. When the single-inlet key is inserted, one gas inlet may be configured for use in the module.

Stand-alone
Individual. A stand-alone module is not connected to any other module.

Static IP address

A permanent IP address that is assigned to a device by a network administrator. It is the permanent address for the device, and may be used to identify the device on a network. It is not automatically released when the device disconnects from the network.

Station

An area or zone dedicated to a specific activity. A compliance testing station may contain several IntelliDoX modules and gangs of connected modules.

U

USB flash drive

A data storage device that is compatible with USB ports. USB flash drives are removable and portable, and may be used to transfer data between devices that contain USB ports.

USB port

Universal Serial Bus. A USB port is a standard connection interface for computers and personal electronics.

V

v/v

Volume percent concentration.

Contact BW Technologies

Corporate Headquarters

BW Technologies by Honeywell
2840 - 2 Avenue SE
Calgary AB
Canada T2A 7X9

America

BW Technologies by Honeywell
405 Barclay Blvd.
Lincolnshire IL
USA 60069

Europe

BW Technologies by Honeywell
Hatch Pond House
4 Stinsford Road
Nuffield Industrial Estate
Poole Dorset BH17 0RZ
United Kingdom

Web

www.honeywellanalytics.com

Telephone

Toll-free, Canada: 1-800-663-4164
Toll-free, Europe:+44(0)1295 700300
Toll-free, USA:1-888-749-8878
All other regions:+1-403-248-9226

Warranty Registration

www.honeywellanalytics.com/support/product-registration

50104991-168 // OM-EN-FMSU_C2 English
© BW Technologies by Honeywell 2016. All rights reserved.